LLC Resonant Converter design

- Chirock Huang
- MMS FAE
- May .2008
- Email:Chirock.Huang@nxp.com

The Advantages of LLC Resonant Converter

- High efficiency

  - Primary MOS Zero-Voltage Switching

  - Secondary Rectifier Diode Zero-Current Switching & low Vf.

- High power density

  - High efficiency.

- Good EMI (low dv/dt and di/dt)
- Better cross regulation for multi-output
- output ripple noise lower than flyback

Agenda:

- Basic concept of L and C characteristic
- LLC resonant design
- How to use TEA1611 design LLC

- **Basic Concept of L and C characteristic**

Capacitor DC Characteristic

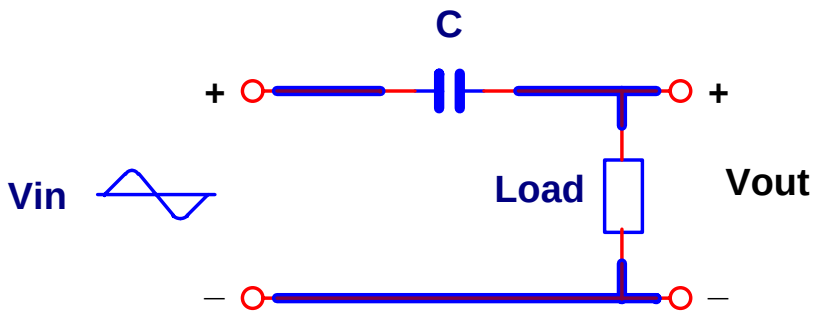

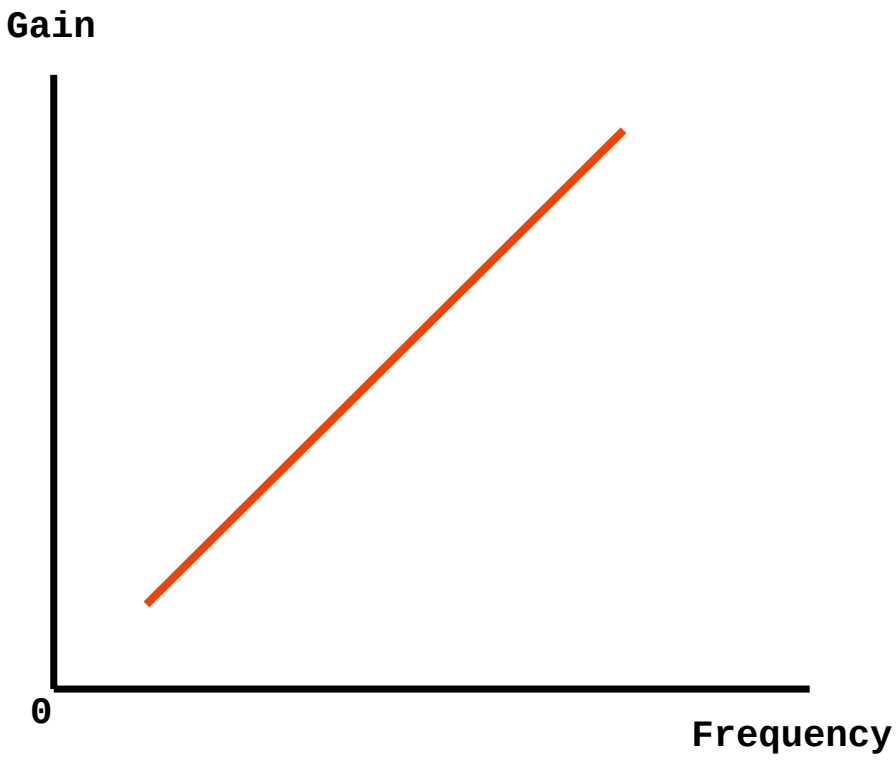

Inductor DC Characteristic

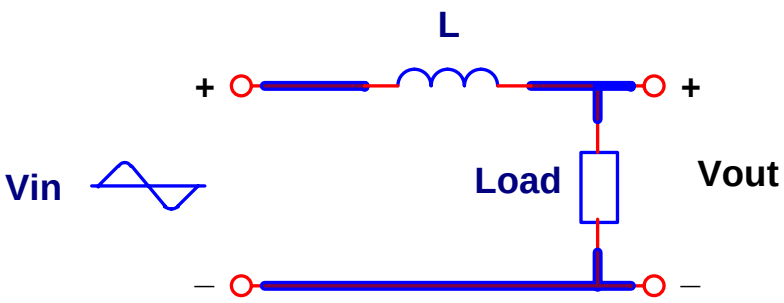

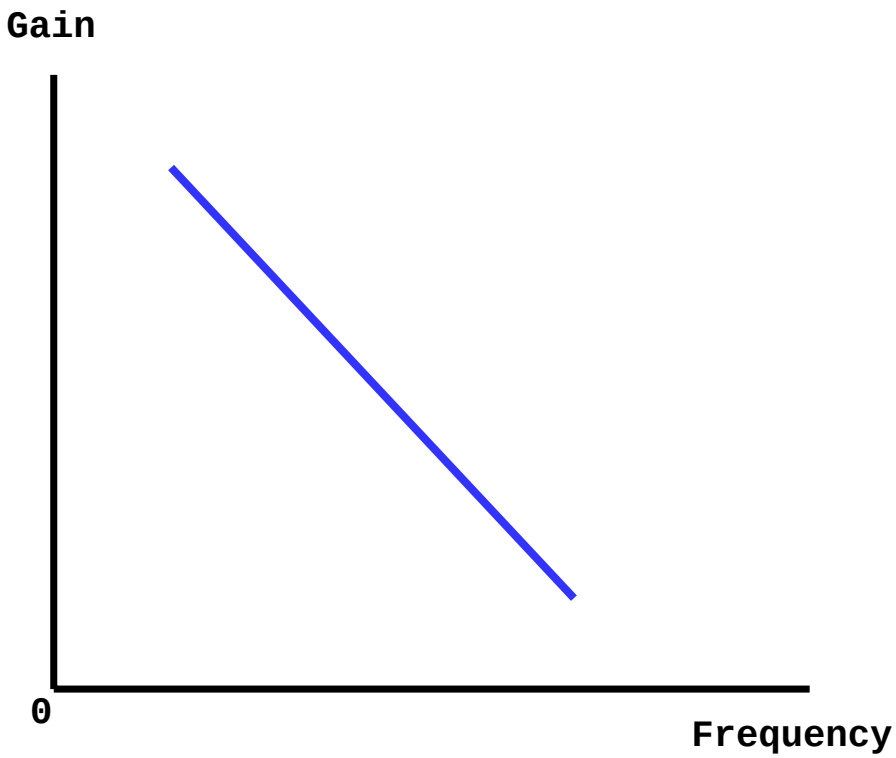

LC DC Characteristic

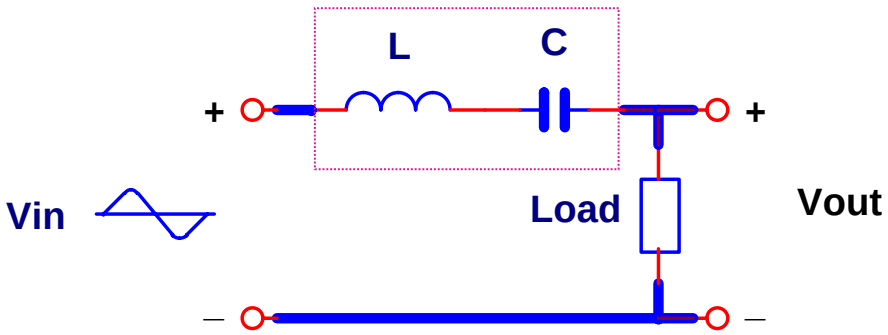

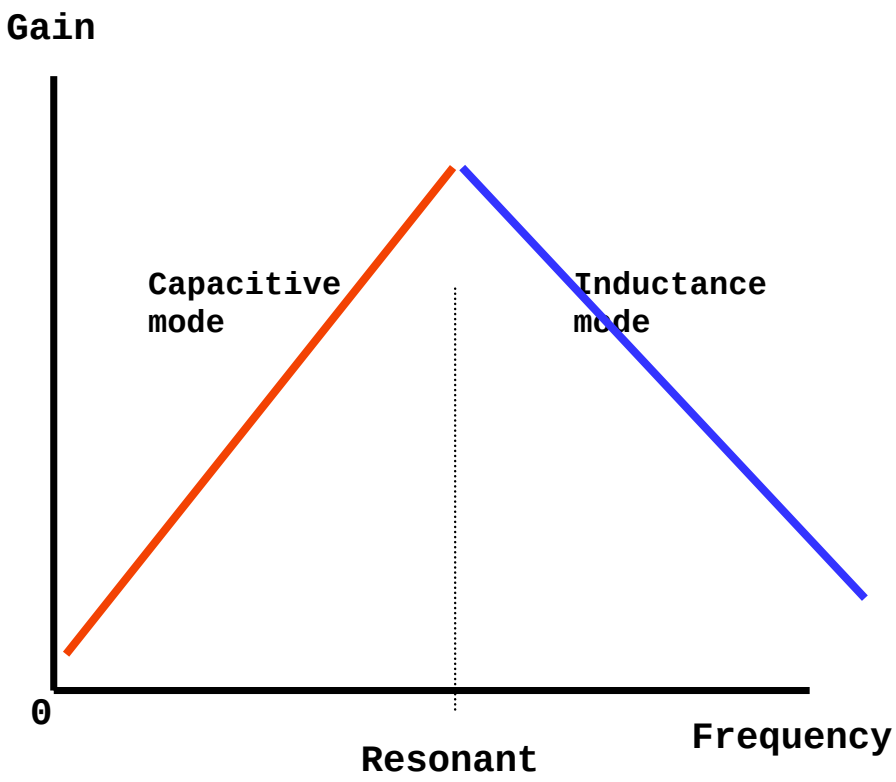

Switching Losses concept

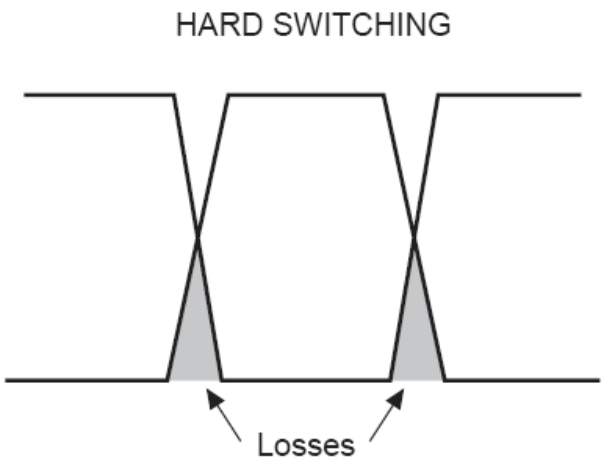

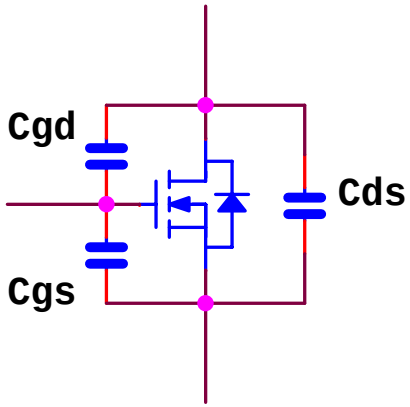

Ciss=Cgd+Cgs

Coss=Cgd+Cds

Zero Voltage Switching

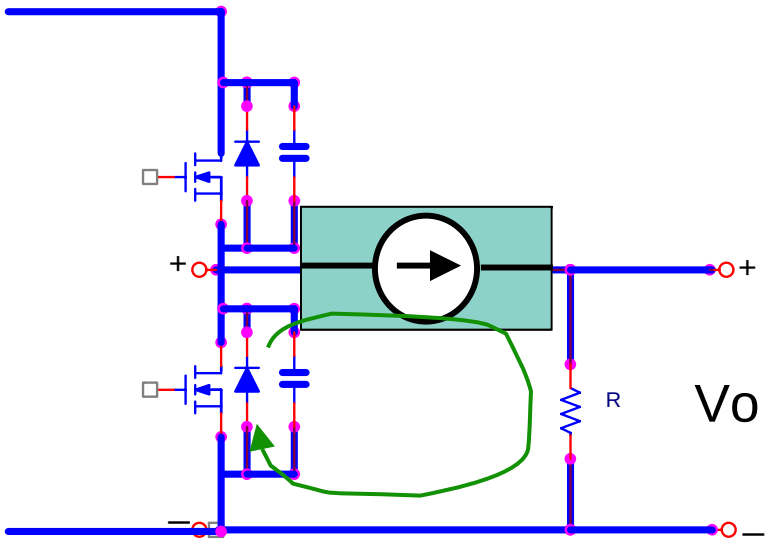

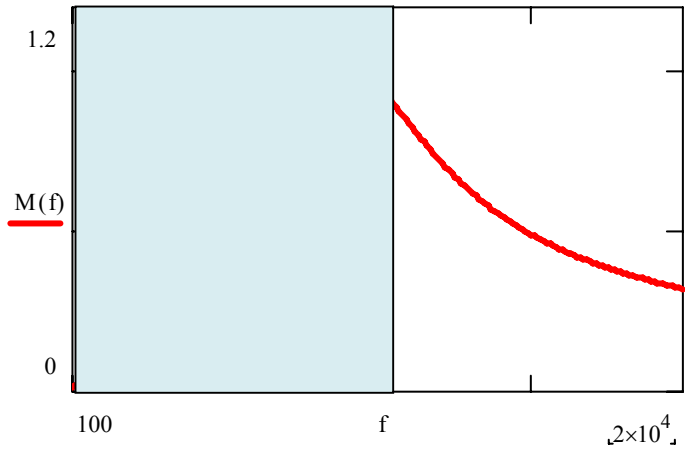

Zero Current Switching

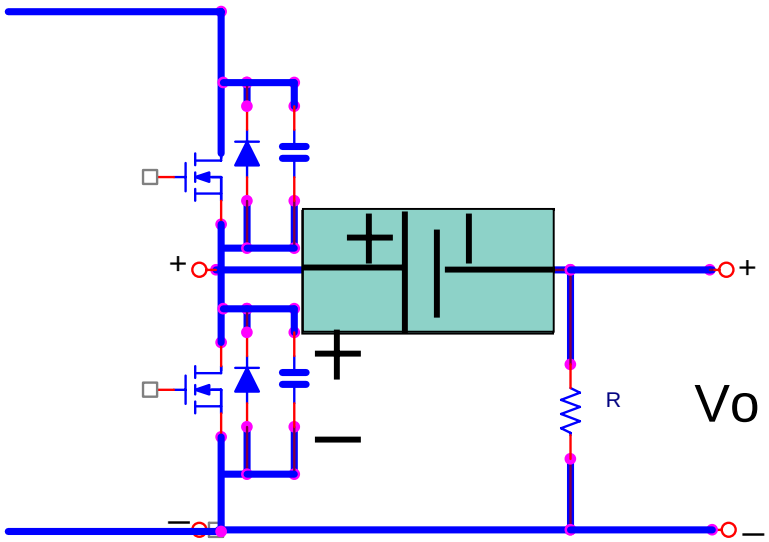

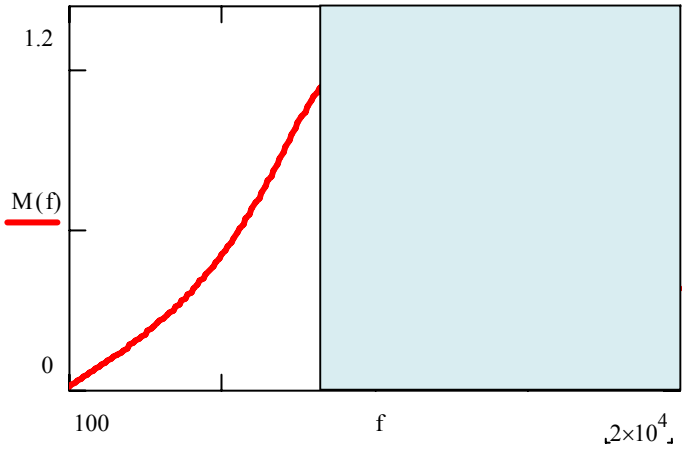

LLC resonant design

LLC Resonant Half Bridge Topology

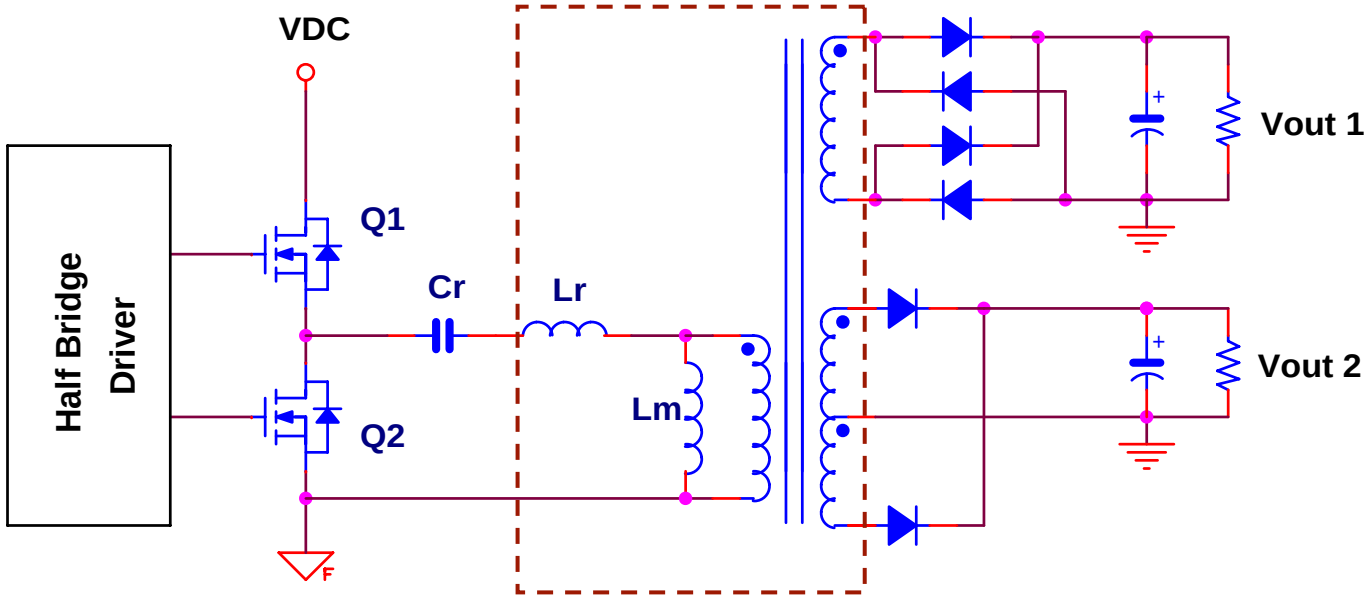

- Multi resonant LLC tank circuit.
- Fixed 50% duty cycle for Q1 & Q2.
- Resonant tank is consist of Cr, Lr & Lm, 3 reactive elements, 2 resonant frequencies.
- Lm & Lr can be realized to integrate in a single transformer.
- The resonant tank and the load act as a voltage divider with variable frequency control.
- Vout 1 : Single-end output with bridge rectification, high voltage low current is prefer.
- Vout 2 : Center-tapped output with full-wave rectification, suitable for low voltage high current.

The Transfer Functions of HB LLC Resonant Converter

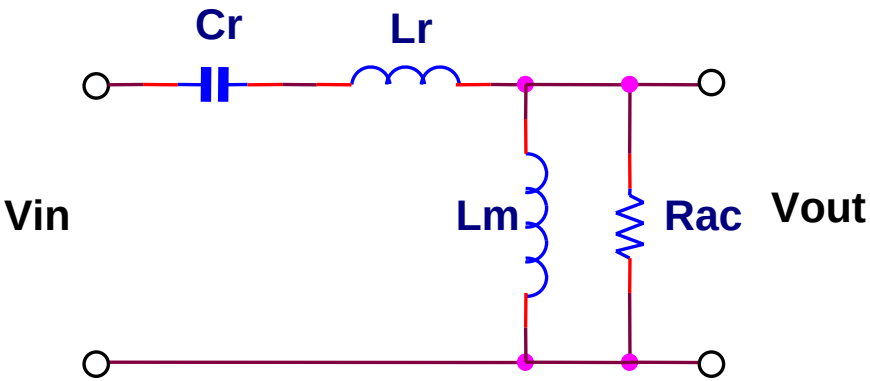

$$\frac{V_O}{V_{IN}} = \frac{\dfrac{sRL_m}{R+sL_m}}{\dfrac{sRL_m}{R+sL_m} + sL_r + \dfrac{1}{sC_r}}$$

$$= \frac{s^2 RL_m C_r}{s^3 L_m L_r C_r + s^2 (RL_m C_r + RL_r C_r) + sL_m + R}$$

$$K = \frac{L_m}{Lr} \qquad Q_L = \frac{\omega_0 * L_r}{n^2 * R_L} \qquad Z_o = \sqrt{\frac{Lr}{Cr}} \qquad \omega_0 = \frac{1}{\sqrt{L_r * C_r}} = 2\pi f_0$$

$$M(K, Q_L, S) = \frac{V_{Rac}}{V_{in}} = \frac{V_{Rac}}{Vd/2}$$

$$= \frac{-K*(S^2/\omega_o^2)}{(\pi^2/8)*Q_L*K*(S^3/\omega_o^3) + (K+1)(S^2/\omega_o^2) + (\pi^2/8)*K*(S^2/\omega_o^2) + 1}$$

$$Let \quad S = j\omega \quad and \quad \omega_n = \frac{\omega}{\omega_o}$$

$$M(K, Q_L, \omega_n) = \frac{-K*\omega_n^2}{[1-(K+1)*\omega_n^2] + j(\pi^2/8)*Q_L*K*\omega_n*(-\omega_n^2+1)}$$

$$|M(K, Q_L, \omega_n)| = \frac{K*\omega_n^2}{\sqrt{[1-(K+1)*\omega_n^2]^2 + [(\pi^2/8)*Q_L*K*\omega_n*(1-\omega_n^2)]^2}}$$

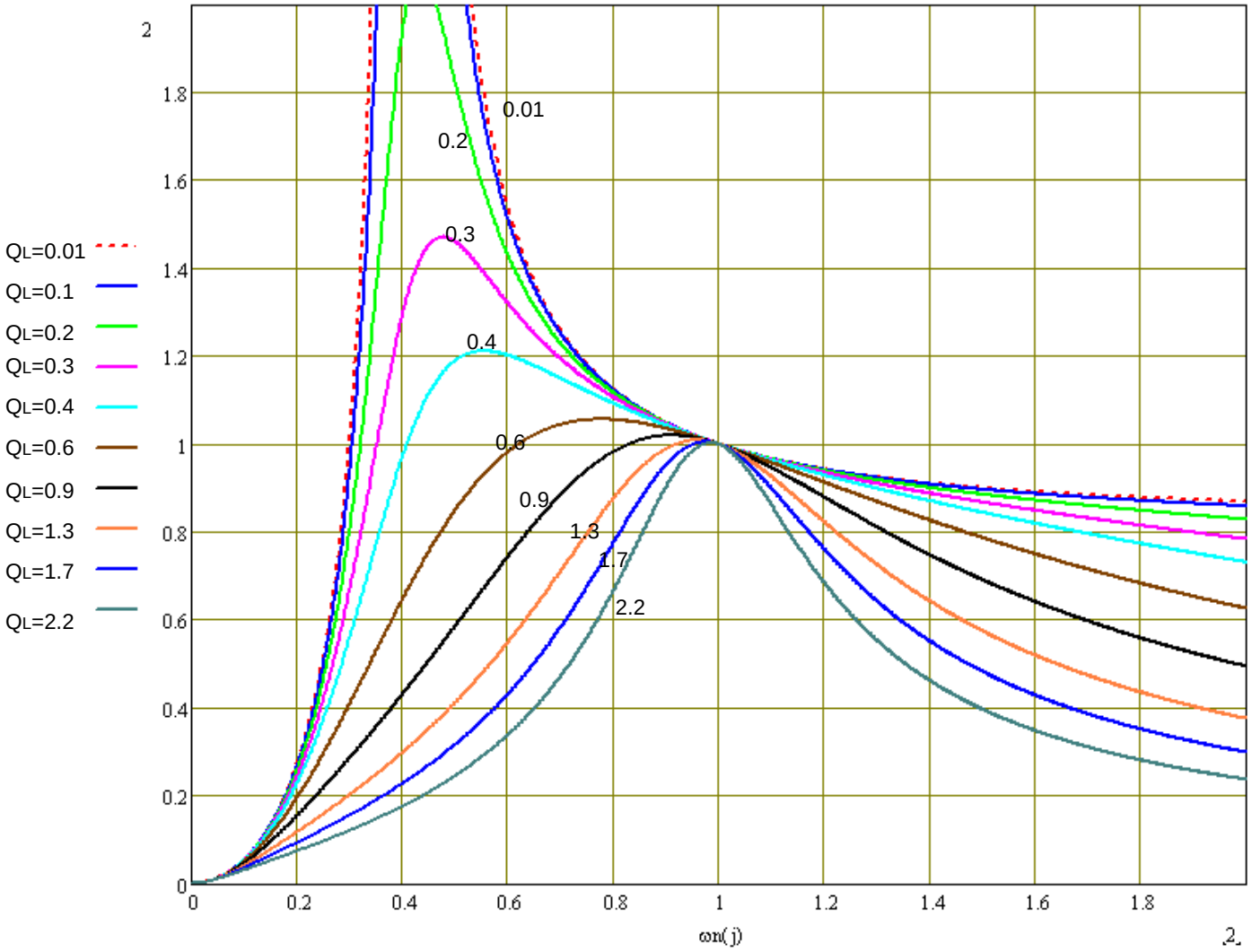

$$\left|M(K,Q_L,\omega_n)\right| = \frac{K * \omega_n^2}{\sqrt{[1-(K+1)*\omega_n^2]^2 + [(\pi^2/8)*Q_L*K*\omega_n*(1-\omega_n^2)]^2}}$$

The Characteristic of LLC resonant topology

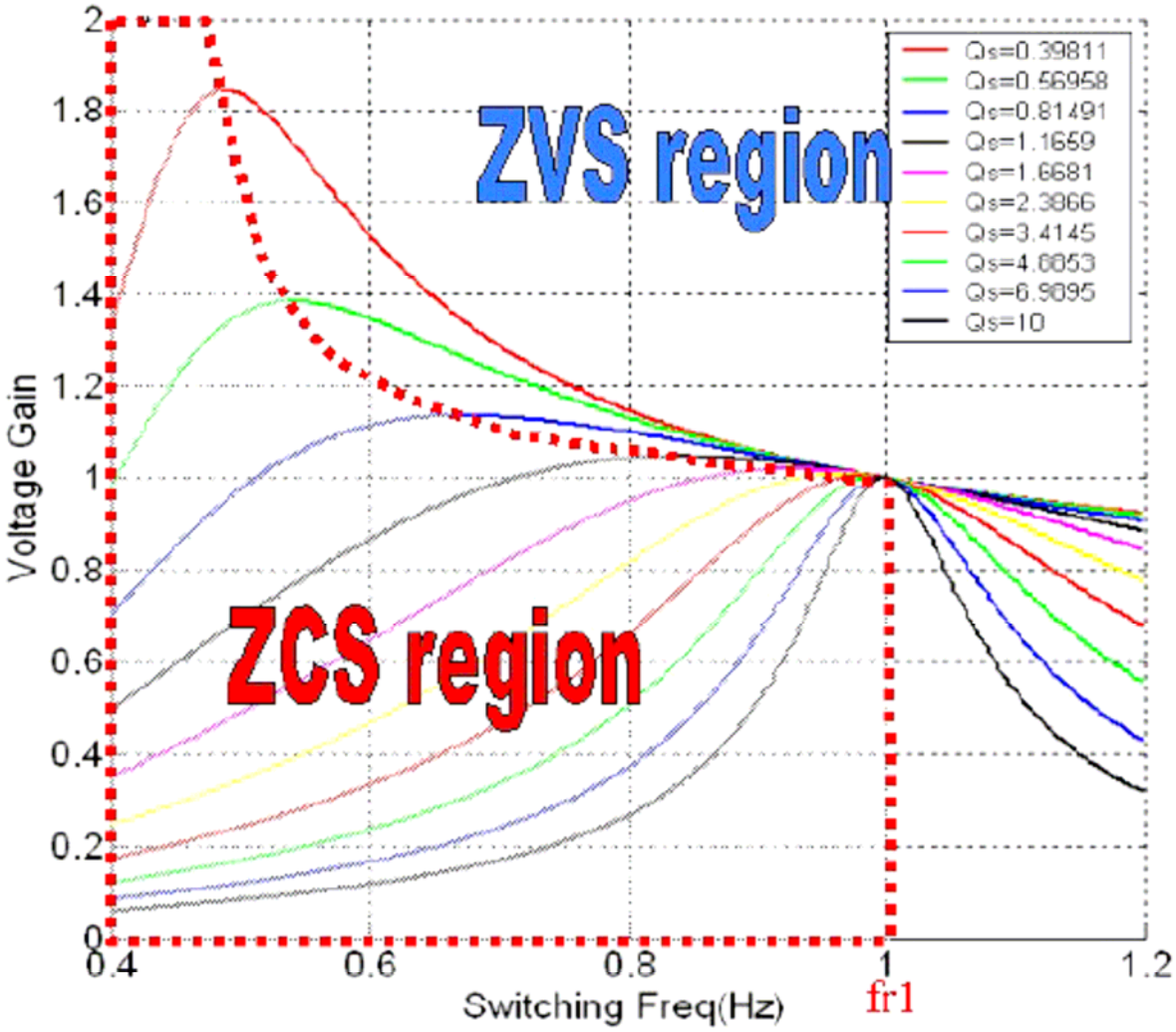

DC Characteristic of LLC Resonant Converter

Region 1:

- Similar with SRC.
- ZVS.

Region 2:

- Lm join resonant.
- ZVS.
- Lower turn off loss.
- LLC operation area.

Region 3:

- Fs < Fr.
- ZCS.
- To avoid operate in this area.

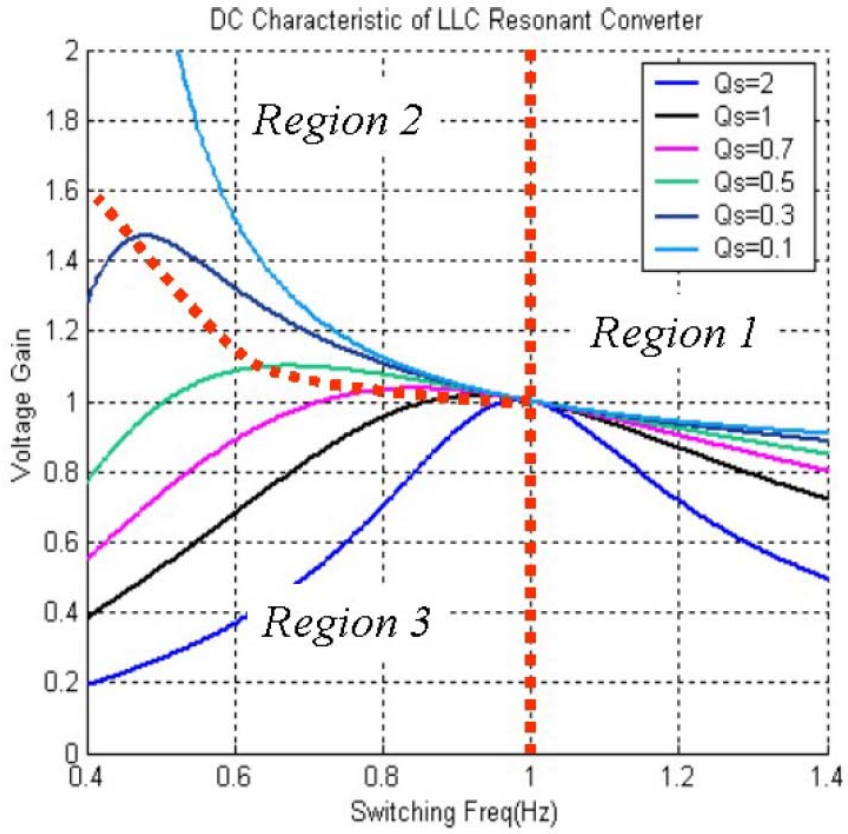

DC Characteristic of LLC Resonant Converter

In region 1, the converter works very similar to SRC. In this region, Lm never resonates with resonant capacitor Cr

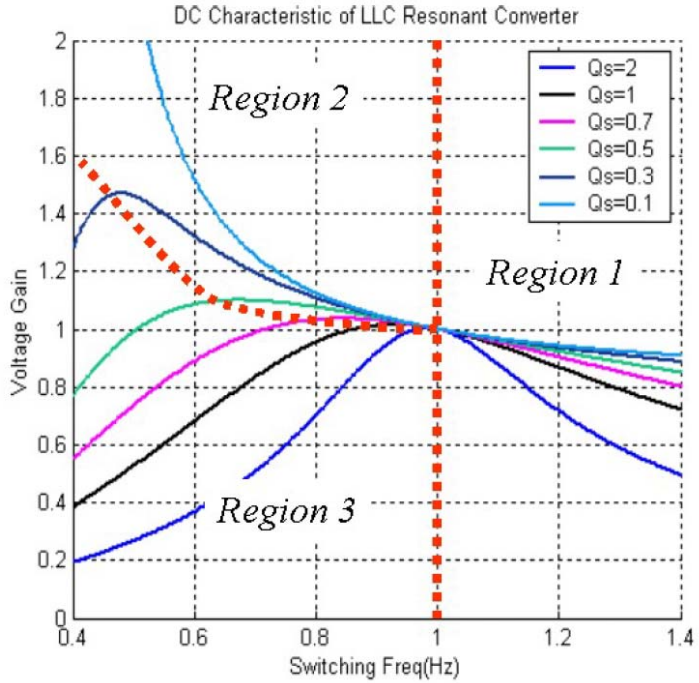

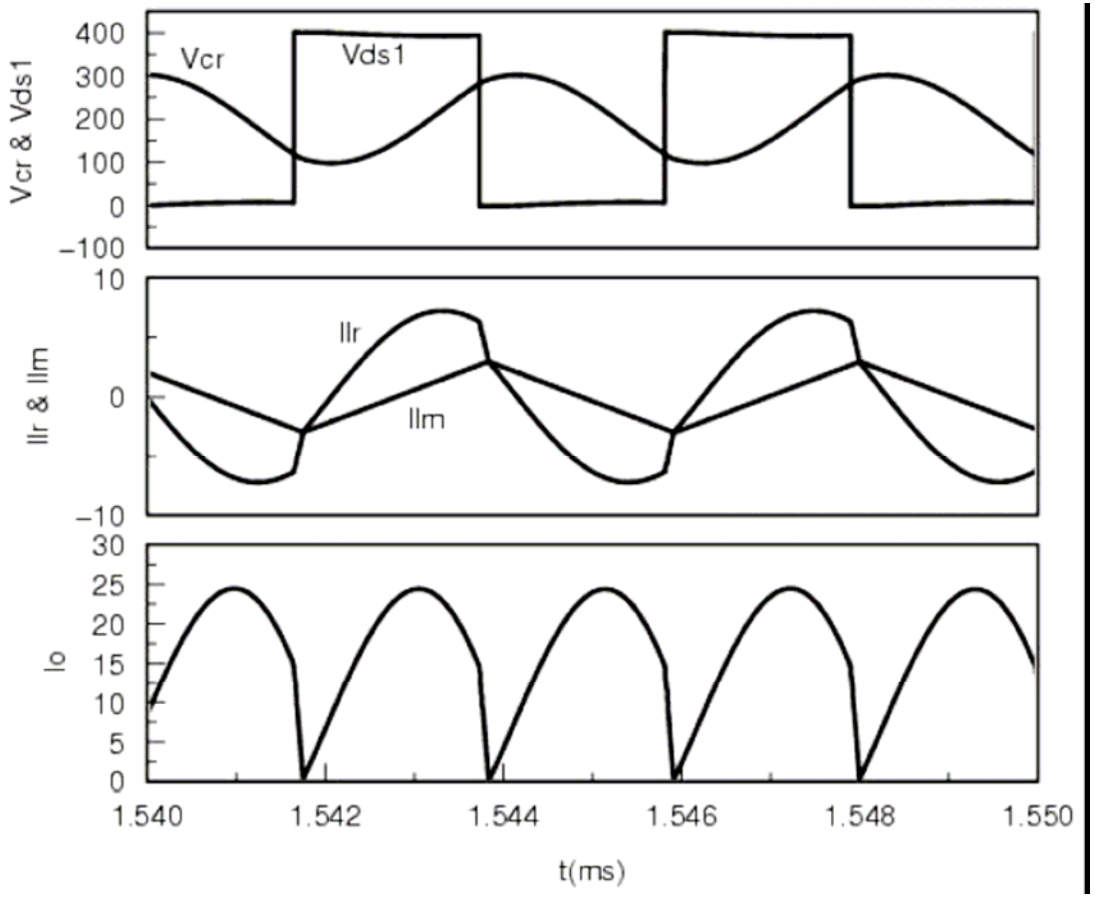

DC Characteristic of LLC Resonant Converter

In region 2, The waveforms could be divided into clearly two time intervals. In first time interval, Lr resonant with Cr. Lm is clamped by output voltage. When Lr current resonant back to same level as Lm current, the resonant of Lr and Cr is stopped, instead, now Lm will participate into the resonant and the second time interval begins. During this time interval, the resonant components will change to Cr and Lm in series with Lr, which is shown in the waveforms as a flat region.

So the LLC resonant converter is a multi resonant converter since the resonant frequency at different time interval is different.

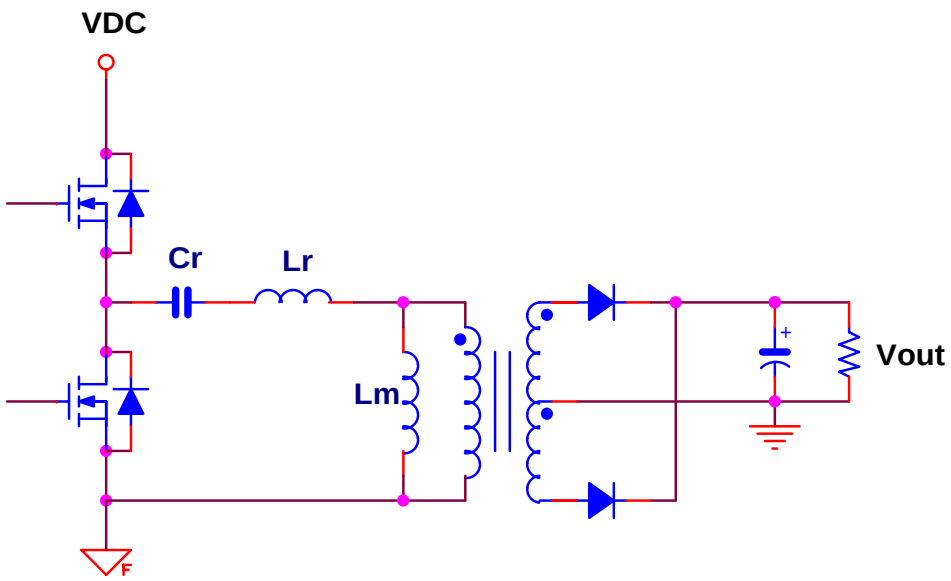

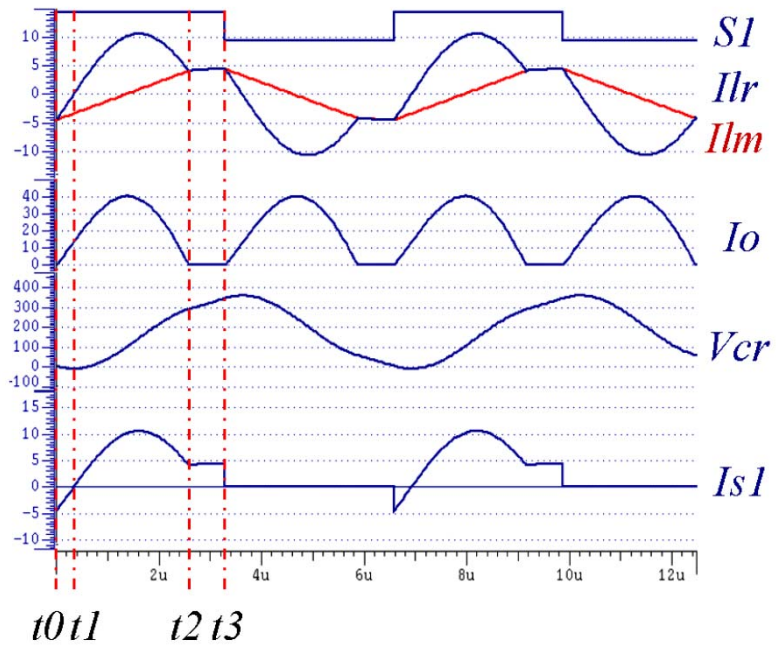

Operation principle in region 2 of Half Bridge LLC resonant topology

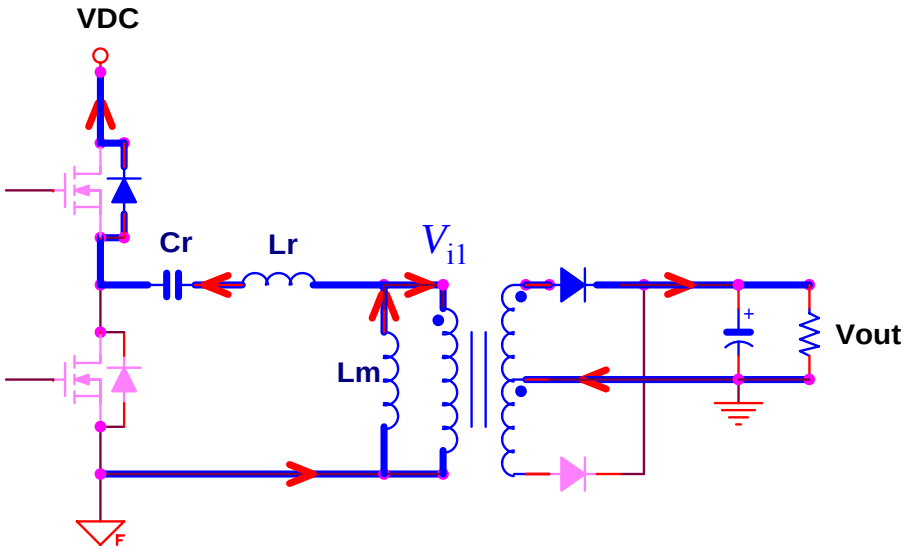

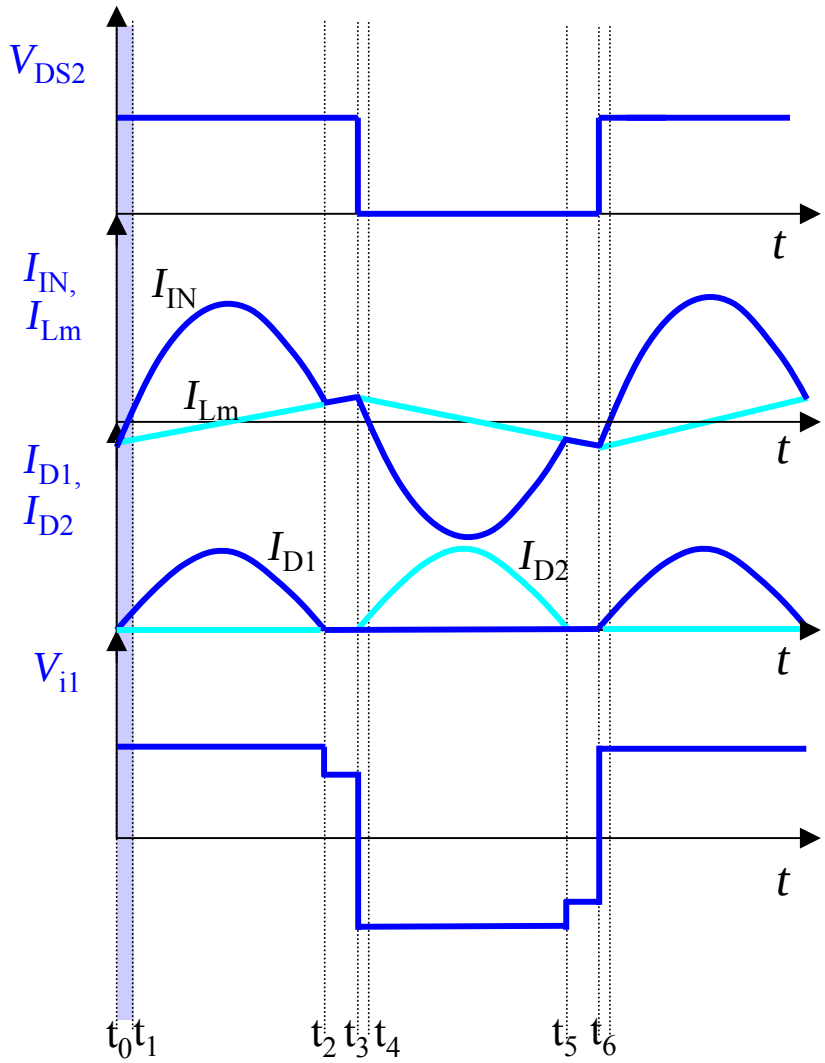

Stage t_0 - t_1

Operation principle in region 2 of Half Bridge LLC resonant topology

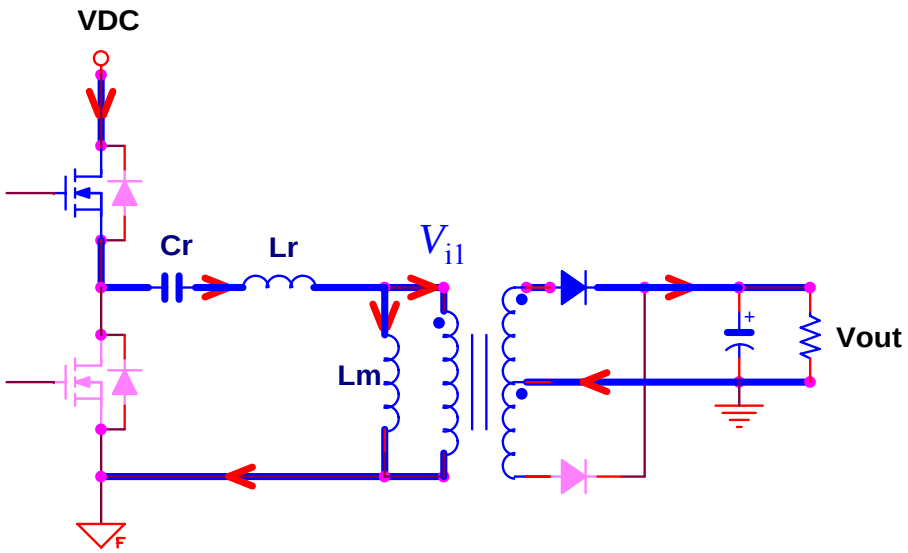

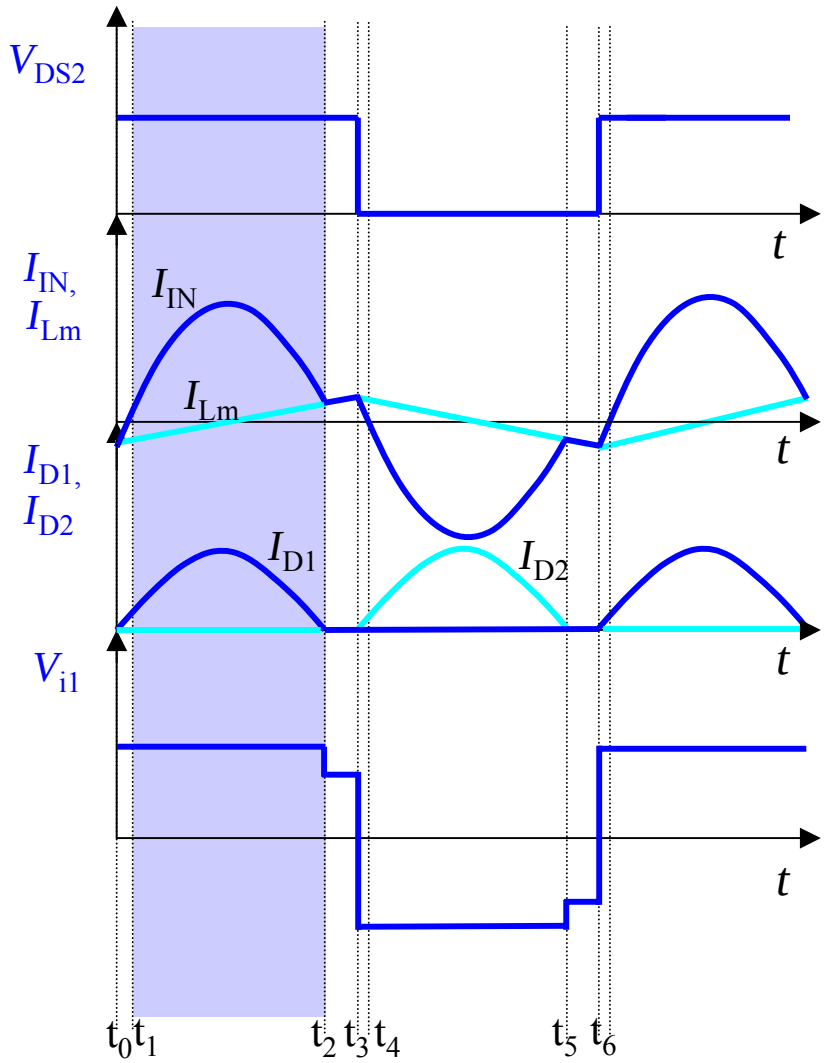

Stage $t_1 - t_2$

Operation principle in region 2 of Half Bridge LLC resonant topology

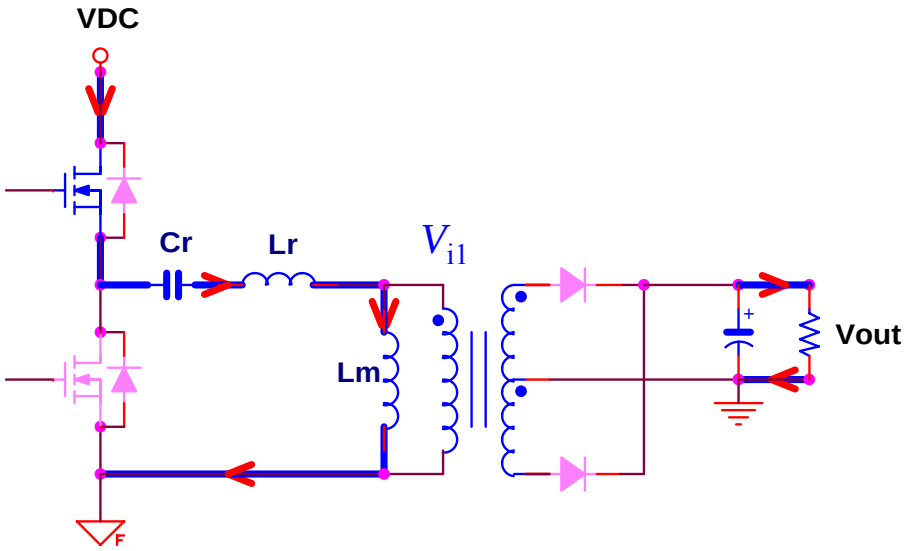

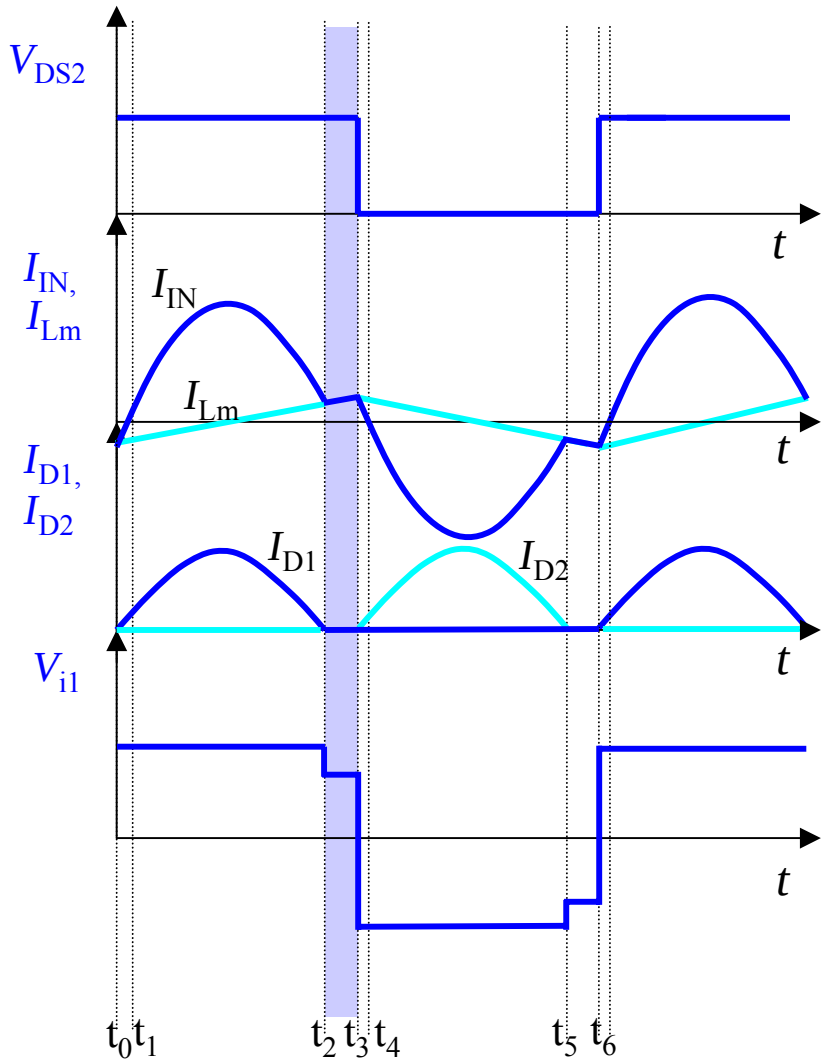

Stage $t_2 - t_3$

Operation principle in region 2 of Half Bridge LLC resonant topology

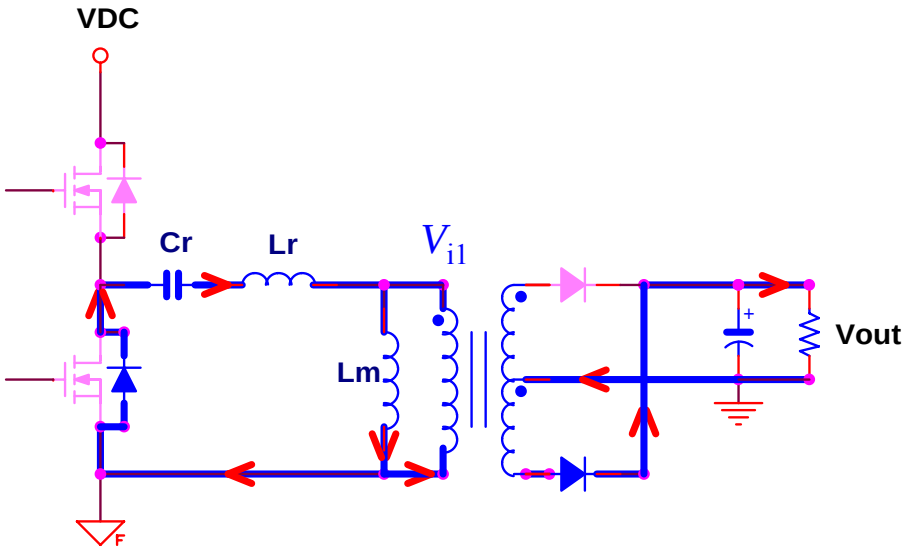

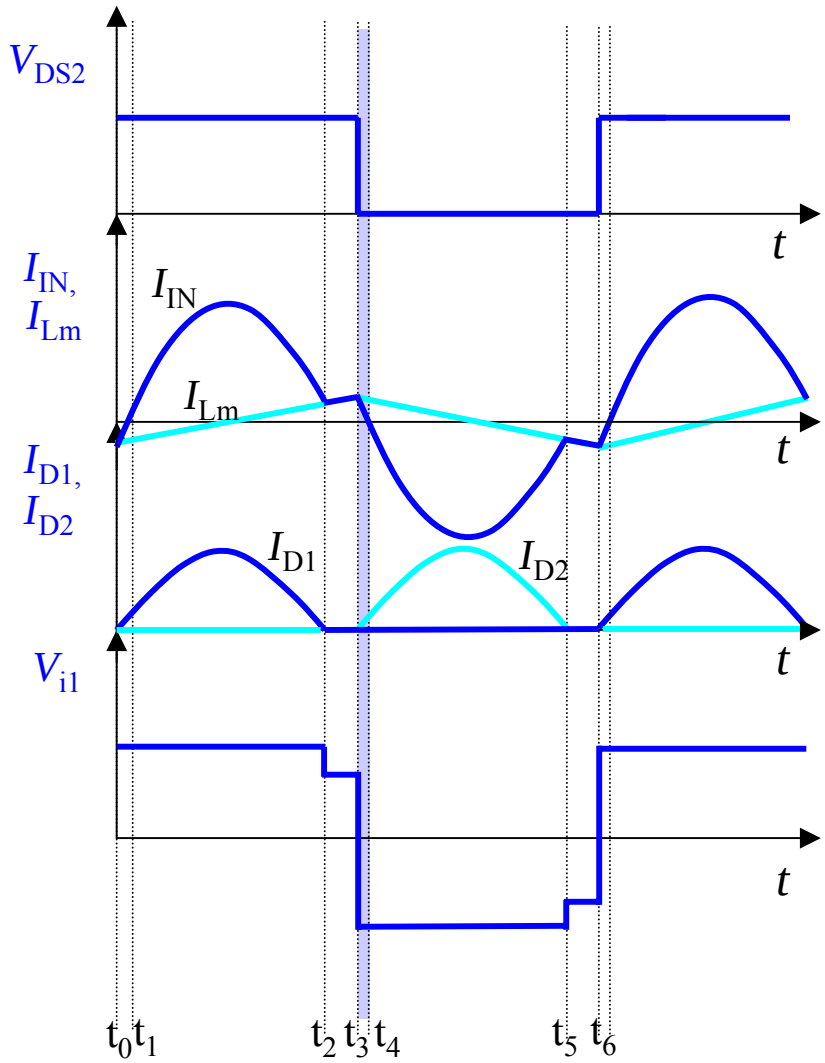

Stage $t_3 - t_4$

Operation principle in region 2 of Half Bridge LLC resonant topology

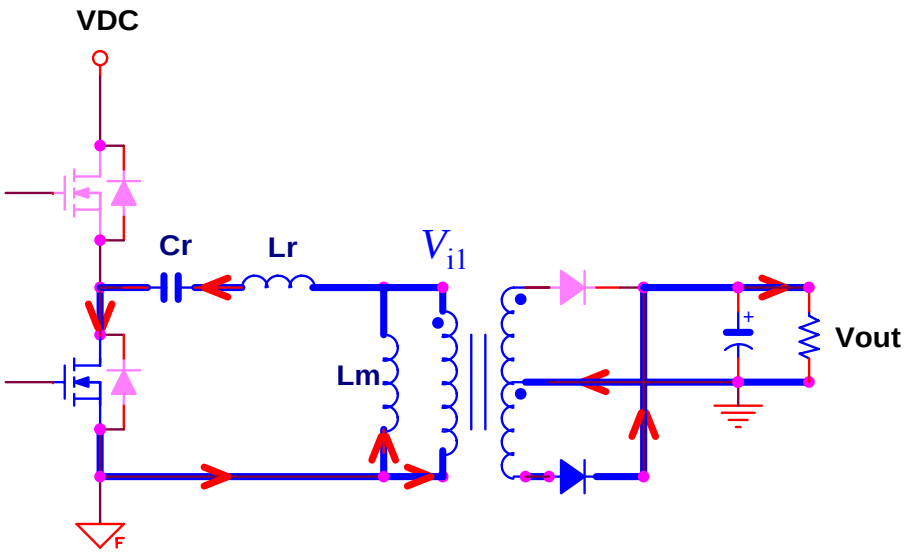

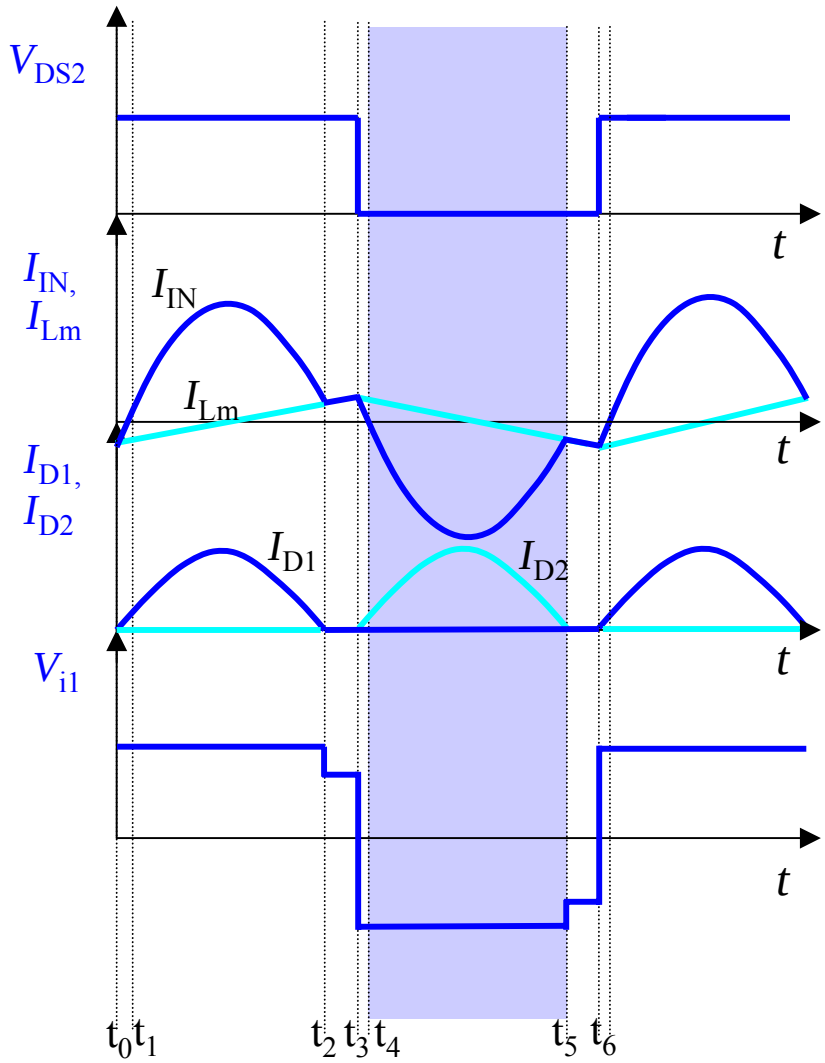

Stage $t_4 - t_5$

Operation principle in region 2 of Half Bridge LLC resonant topology

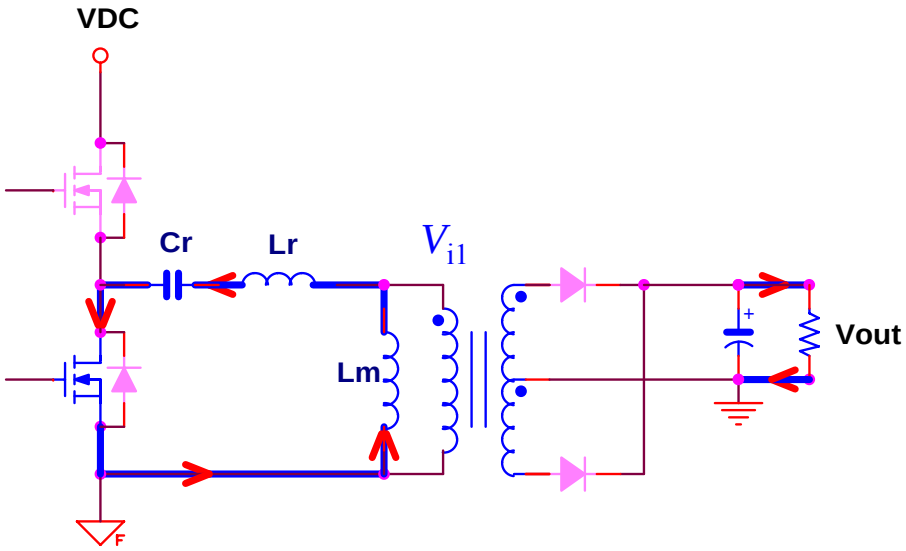

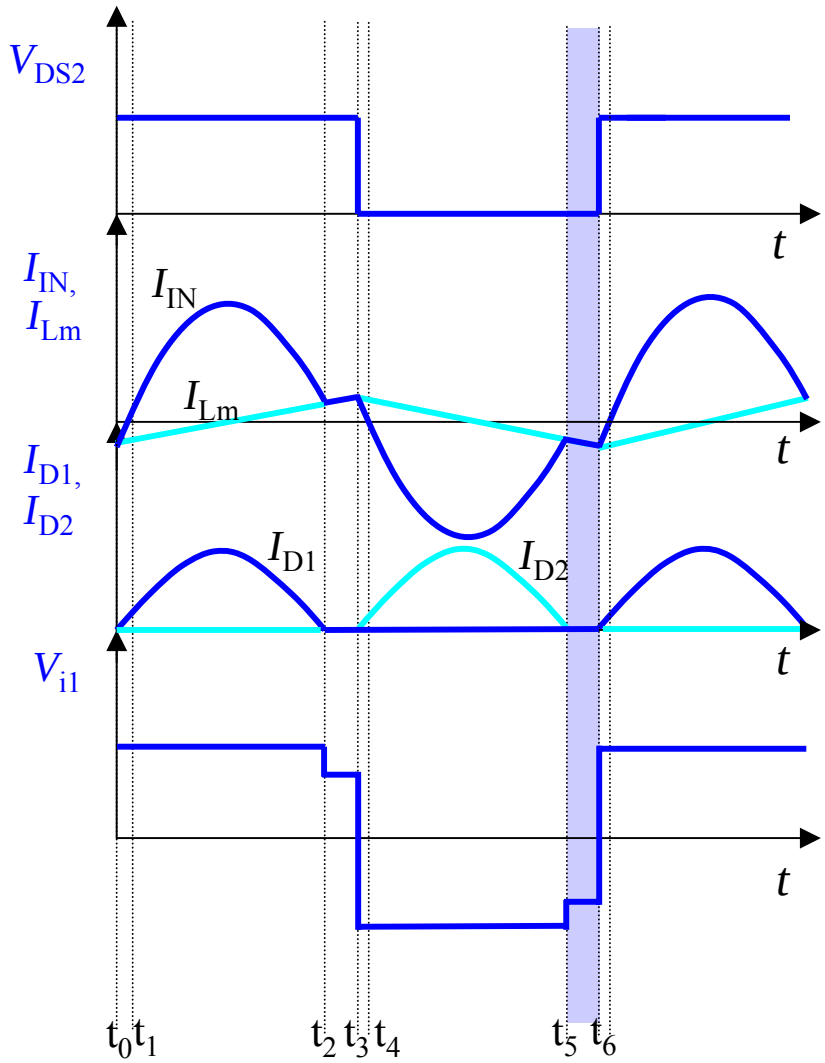

Stage $t_5 - t_6$

LLC resonant parameters design

Turn ratio design

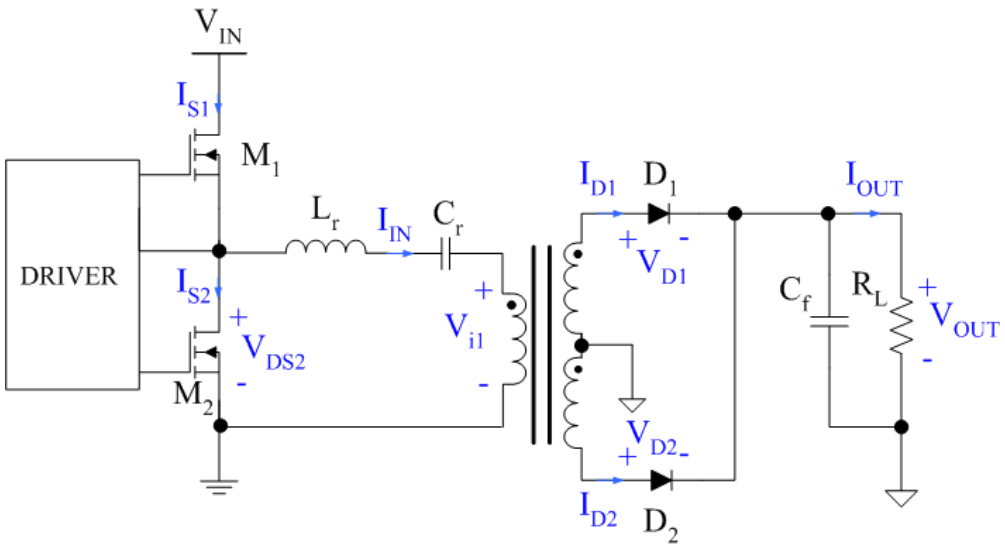

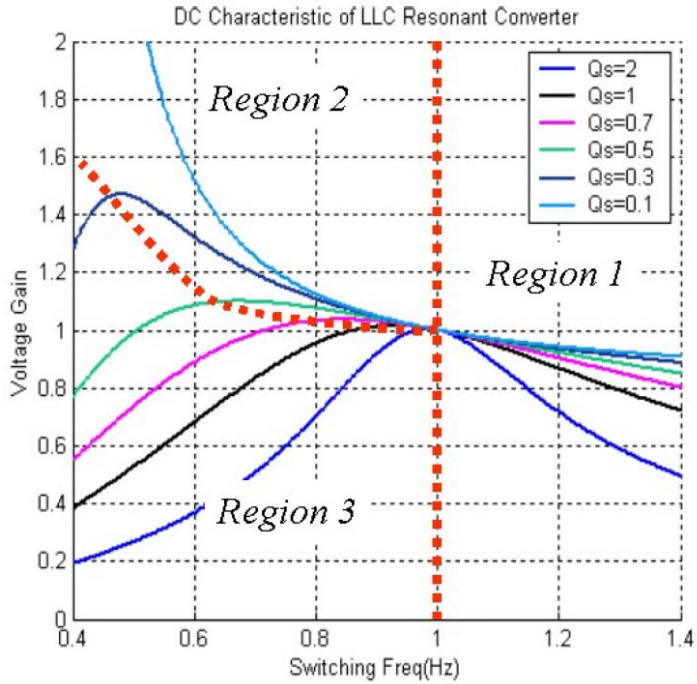

LLC resonant works in region 2, so Gain >=1

$$M = \frac{2 \times n \times V_{out}}{V_d} \geq 1$$

Turn ratio design

For example:

$V_{d,max}$=400V, Vo=24V Io=10A, Hold up time=16ms
Cbulk=150uF fo=100K

Vbk(secondary diode)=2*Vo=48

$$M_{\min} = \frac{2 \times n_{\min} \times (V_{out} + V_f)}{V_{d\max}} \geq 1$$

$$\Rightarrow \frac{2 \times n_{\min} \times 24}{400} = 1$$

$$\Rightarrow n_{\min} = 8.147$$

Hold up time design

Assume efficiency is 96%

$$P_i = \frac{P_o}{E_{ff}} = \frac{24 \times 10}{0.96} = 250$$

Although hold-up time is 16ms, but we need keep 20% margin

$$t_{hold-up} = 16ms * 120\% = 19.2ms \approx 20ms$$

$$V_{d\min} = \sqrt{V_{d\max}^2 - \frac{2 * P_i * t_{hold-up}}{C_{bulk}}} = \sqrt{400^2 - \frac{2 * 250 * 20m}{150u}} = 305$$

$$M_{\min} = \frac{2 * n_{\min} * (V_o + Vf)}{V_{d\min}} = 1.309$$

LLC DC Characteristic

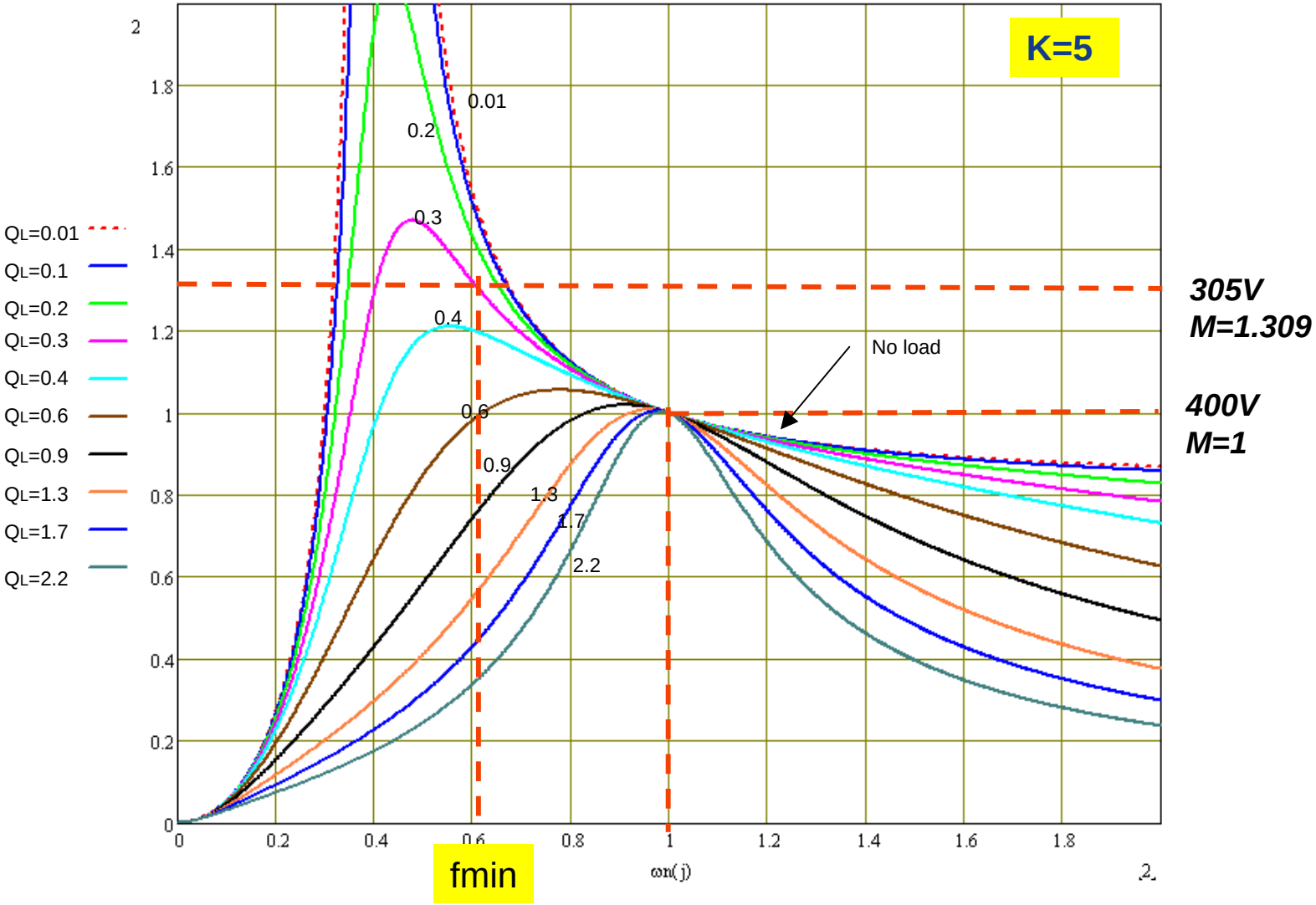

Design the transformer turns for K=5 Q=0.3

The worst case for the transformer design is the LLC operating in the minimum switching frequency condition

$$K = \frac{L_m}{L_r} = 5 \qquad Q_L = \frac{\omega_0 * L_r}{n^2 * R_L} = 0.3$$

$$f_{\min} = 0.61 * 100kHz = 61kHz \qquad B_{\max} = 2500$$

$$N_p^{\min} = \frac{n(V_o + V_f)}{4 * f_{\min} * B_{\max} * Ae} = 32.79$$

Choose Np,Ns to meet above requirement

$$N_p = 33 \qquad Ns = 4 \qquad n = \frac{N_p}{N_s} = 8.25 \qquad n_{\min} \geq 8.147$$

$$B_{\max} = \frac{N_p / N_s (V_o + V_f)}{4 * f_{\min} * N_p * Ae} = 2515$$

$$\Delta B = \frac{N_p / N_s (V_o + V_f)}{2 * f_o * N_p * Ae} = 3069$$

Design Lr,Lm,Cr for K=5 Q=0.3

$$K = \frac{L_m}{L_r} = 5 \qquad Q_L = \frac{\omega_0 * L_r}{n^2 * R_L} = 0.3 \qquad R_L = \frac{V_o + Vf}{I_o} = \frac{24 + 0.55}{10} = 2.455$$

By selecting the resonant frequency as 100KHz, the resonant components will be determined

$$Q_L = \frac{\omega_0 * L_r}{n^2 * R_L} = \frac{1}{n^2 * R_L * \omega_0 * C_r}$$

$$\Rightarrow C_r = \frac{1}{n^2 * R_L * 2\pi f_o * Q_L} = 32nF$$

$$L_r = \frac{1}{(2\pi f_o)^2 * C_r} = 78uH \qquad L_m = K * Lr = 390uH$$

$$I_{Cr}^{rmsHV} = \sqrt{[\frac{\pi * I_O}{2\sqrt{2} * n}]^2 + [\frac{n(Vo + V_f)}{4\sqrt{2} * f_o * L_m}]^2} = 1.67A \qquad V_{Cr}^{HV} = \frac{V_{d\max}}{2} + \frac{\sqrt{2} * I_{Cr}^{rms}}{2\pi * f_o * C_r} = 313V$$

$$I_{Cr}^{rmsLV} = \sqrt{[\frac{\pi * I_O}{2\sqrt{2} * n}]^2 + [\frac{n(Vo + V_f)}{4\sqrt{2} * f_{\min} * L_m}]^2} = 1.83A \qquad V_{Cr}^{LV} = \frac{V_{d\min}}{2} + \frac{\sqrt{2} * I_{Cr}^{rmsLV}}{2\pi * f_{\min} * C_r} = 358V$$

Design Lr,Lm,Cr for K=5 Q=0.2

$$K = \frac{L_m}{L_r} = 5 \qquad Q_L = \frac{\omega_0 * L_r}{n^2 * R_L} = 0.2$$

$$f_{\min} = 0.61 * 100kHz = 66kHz \qquad B_{\max} = 2500$$

$$N_p^{\min} = \frac{n(V_o + V_f)}{4 * f_{\min} * B_{\max} * Ae} = 32.79$$

Choose Np,Ns to meet above requirement

$$N_p = 33 \qquad Ns = 4 \qquad n = \frac{N_p}{N_s} = 8.25 \qquad n_{\min} \geq 8.147$$

$$B_{\max} = \frac{N_p / N_s (V_o + V_f)}{4 * f_{\min} * N_p * Ae} = 2324$$

$$\Delta B = \frac{N_p / N_s (V_o + V_f)}{2 * f_o * N_p * Ae} = 3068$$

Design Lr,Lm,Cr for K=5 Q=0.2

$$K = \frac{L_m}{L_r} = 5 \qquad Q_L = \frac{\omega_0 * L_r}{n^2 * R_L} = 0.2 \qquad R_L = \frac{V_o + Vf}{I_o} = \frac{24 + 0.55}{10} = 2.455$$

$$Q_L = \frac{\omega_0 * L_r}{n^2 * R_L} = \frac{1}{n^2 * R_L * \omega_0 * C_r}$$

$$\Rightarrow C_r = \frac{1}{n^2 * R_L * 2\pi f_o * Q_L} = 49nF$$

$$L_r = \frac{1}{(2\pi f_o)^2 * C_r} = 51uH \qquad L_m = K * Lr = 255uH$$

$$I_{Cr}^{rmsHV} = \sqrt{[\frac{\pi * I_O}{2\sqrt{2} * n}]^2 + [\frac{n(Vo + V_f)}{4\sqrt{2} * f_o * L_m}]^2} = 1.81A \qquad V_{Cr}^{HV} = \frac{V_{d\max}}{2} + \frac{\sqrt{2} * I_{Cr}^{rms}}{2\pi * f_o * C_r} = 282V$$

$$I_{Cr}^{rmsLV} = \sqrt{[\frac{\pi * I_O}{2\sqrt{2} * n}]^2 + [\frac{n(Vo + V_f)}{4\sqrt{2} * f_{\min} * L_m}]^2} = 2.00A \qquad V_{Cr}^{LV} = \frac{V_{d\min}}{2} + \frac{\sqrt{2} * I_{Cr}^{rmsLV}}{2\pi * f_{\min} * C_r} = 291V$$

LLC DC Characteristic

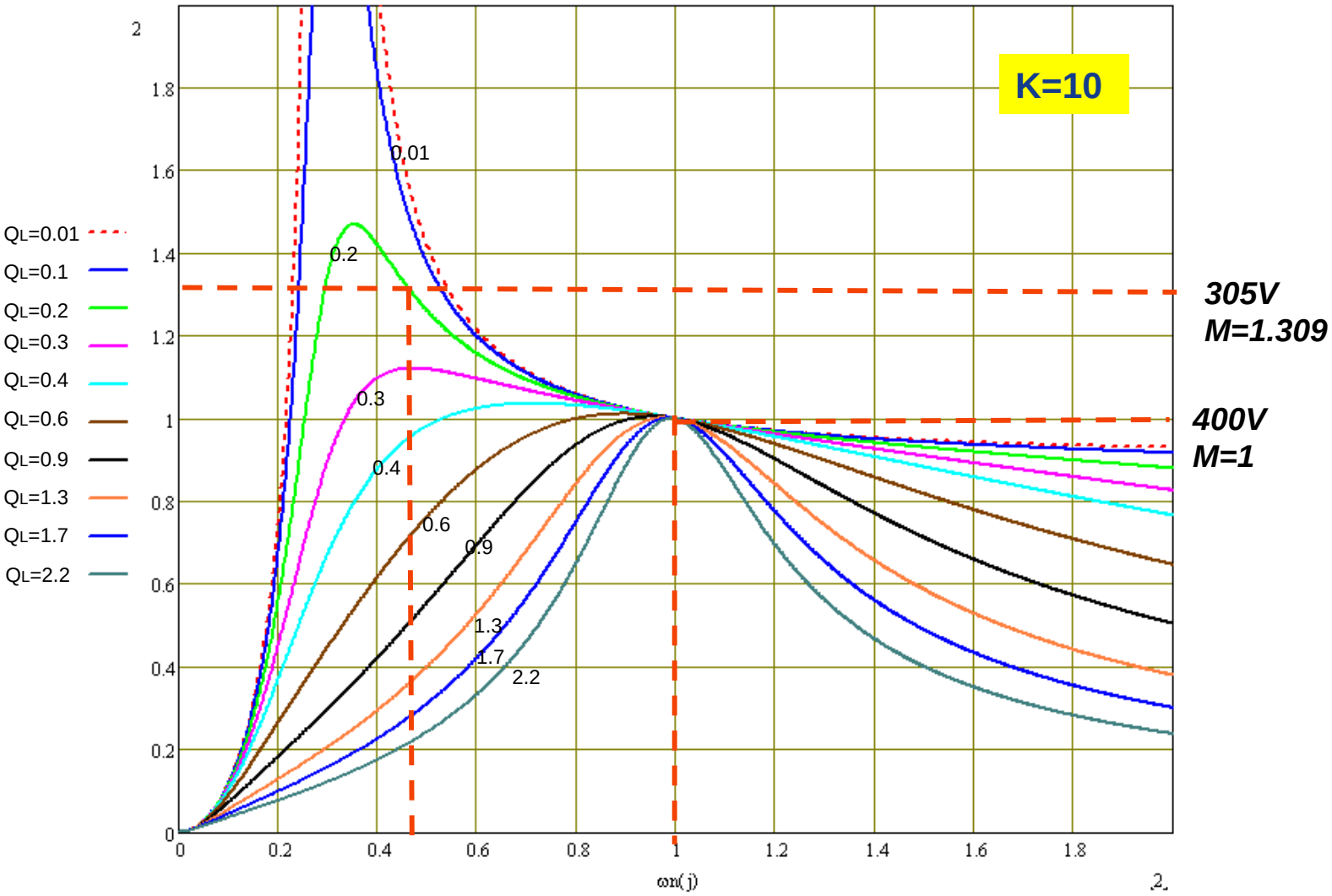

Design Lr,Lm,Cr for K=10 Q=0.2

$$K = \frac{L_m}{L_r} = 10 \qquad Q_L = \frac{\omega_0 * L_r}{n^2 * R_L} = 0.2$$

$$f_{\min} = 0.47 * 100kHz = 47kHz \qquad B_{\max} = 2500$$

$$N_p^{\min} = \frac{n(V_o + V_f)}{4 * f_{\min} * B_{\max} * Ae} = 42.55$$

$$N_p = 43 \qquad Ns = 5 \qquad n = \frac{N_p}{N_s} = 8.6 > 8.147$$

$$B_{\max} = \frac{N_p / N_s (V_o + V_f)}{4 * f_{\min} * N_p * Ae} = 2611$$

$$\Delta B = \frac{N_p / N_s (V_o + V_f)}{2 * f_o * N_p * Ae} = 2455$$

Design Lr,Lm,Cr for K=10 Q=0.2

$$K = \frac{L_m}{L_r} = 10 \qquad Q_L = \frac{\omega_0 * L_r}{n^2 * R_L} = 0.2 \qquad R_L = \frac{V_o + Vf}{I_o} = \frac{24 + 0.55}{10} = 2.455$$

$$Q_L = \frac{\omega_0 * L_r}{n^2 * R_L} = \frac{1}{n^2 * R_L * \omega_0 * C_r}$$

$$\Rightarrow C_r = \frac{1}{n^2 * R_L * 2\pi f_o * Q_L} = 49nF$$

$$L_r = \frac{1}{(2\pi f_o)^2 * C_r} = 51uH \qquad L_m = K * Lr = 510uH$$

$$I_{Cr}^{rmsHV} = \sqrt{[\frac{\pi * I_O}{2\sqrt{2} * n}]^2 + [\frac{n(Vo + V_f)}{4\sqrt{2} * f_o * L_m}]^2} = 1.61A \qquad V_{Cr}^{HV} = \frac{V_{d\max}}{2} + \frac{\sqrt{2} * I_{Cr}^{rms}}{2\pi * f_o * C_r} = 273V$$

$$I_{Cr}^{rmsLV} = \sqrt{[\frac{\pi * I_O}{2\sqrt{2} * n}]^2 + [\frac{n(Vo + V_f)}{4\sqrt{2} * f_{\min} * L_m}]^2} = 1.84A \qquad V_{Cr}^{LV} = \frac{V_{d\min}}{2} + \frac{\sqrt{2} * I_{Cr}^{rmsLV}}{2\pi * f_{\min} * C_r} = 333V$$

Design trade-off consideration

K	Q	Fmin	Np	Ns	n	Bmax	ΔB	Cr	Lr	Lm	Icr(rms)	Vcr(max)
5	0.3	61K	33	4	8.25	2515	3069	32nF	78uH	390uH	1.67	358
5	0.2	66K	33	4	8.25	2324	3068	49nF	51uH	255uH	1.81	291

K	Q	Fmin	Np	Ns	n	Bmax	ΔB	Cr	Lr	Lm	Icr(rms)	Vcr(max)
5	0.2	66K	33	4	8.25	2324	3068	49nF	51uH	255uH	1.81	291
10	0.2	47K	43	5	8.6	2611	2455	49nF	51uH	510uH	1.61	333

Resonant current with different DC input voltage @ Full load

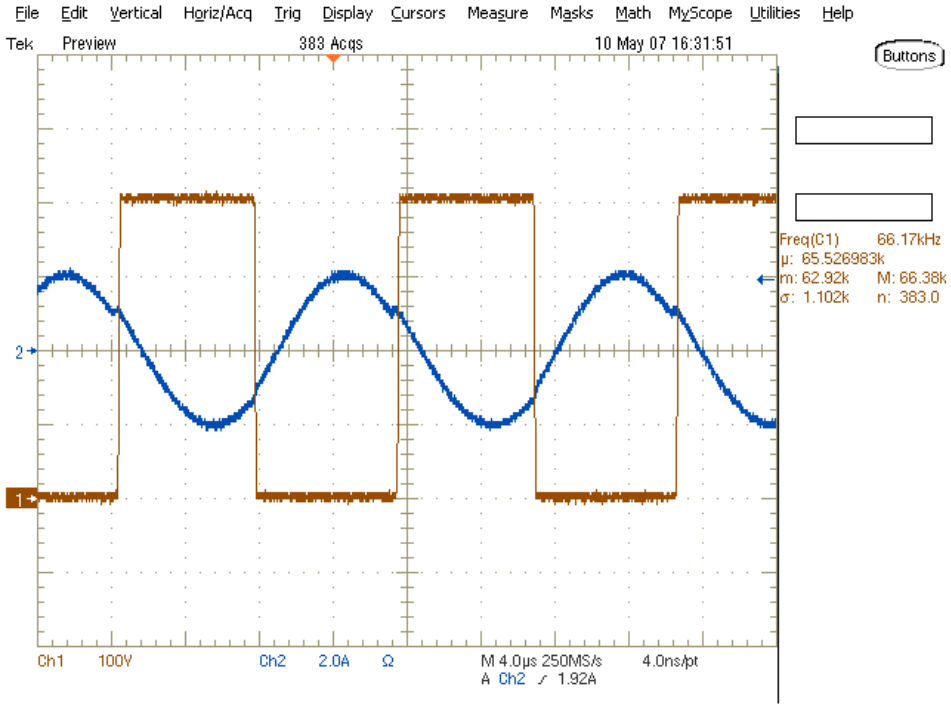

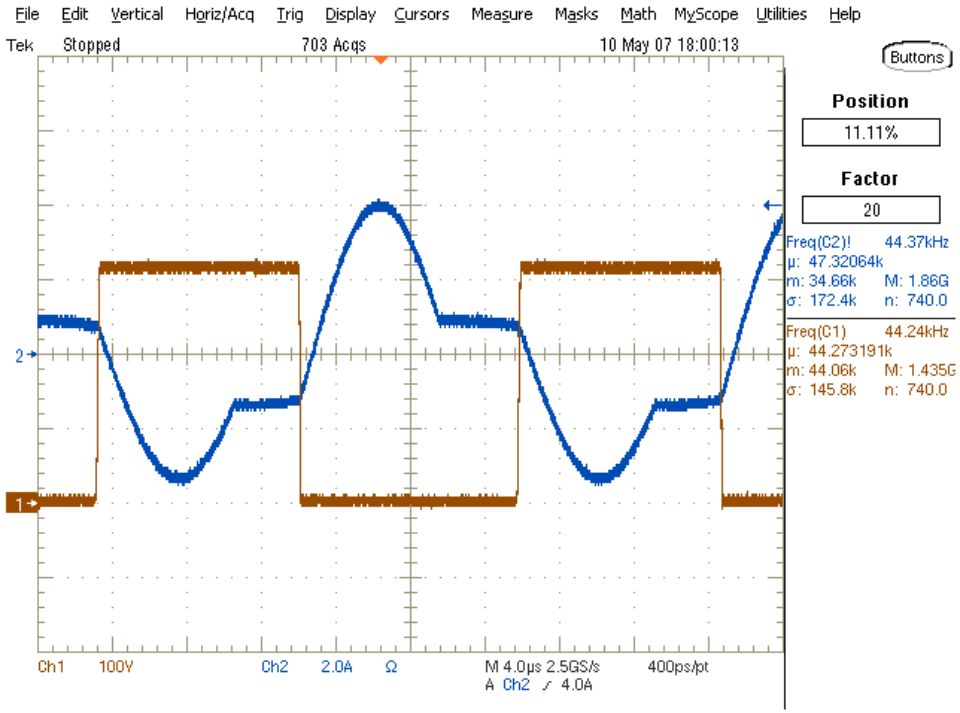

Vdc = 400V

Vdc = 320V

Resonant current with different load condition @ 400V DC input

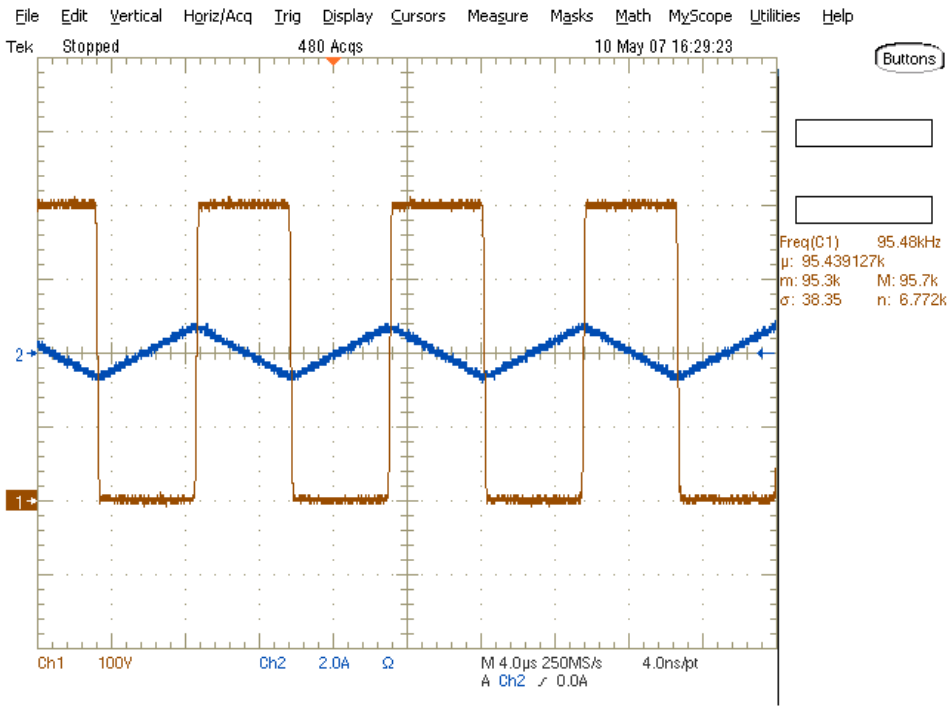

No Load

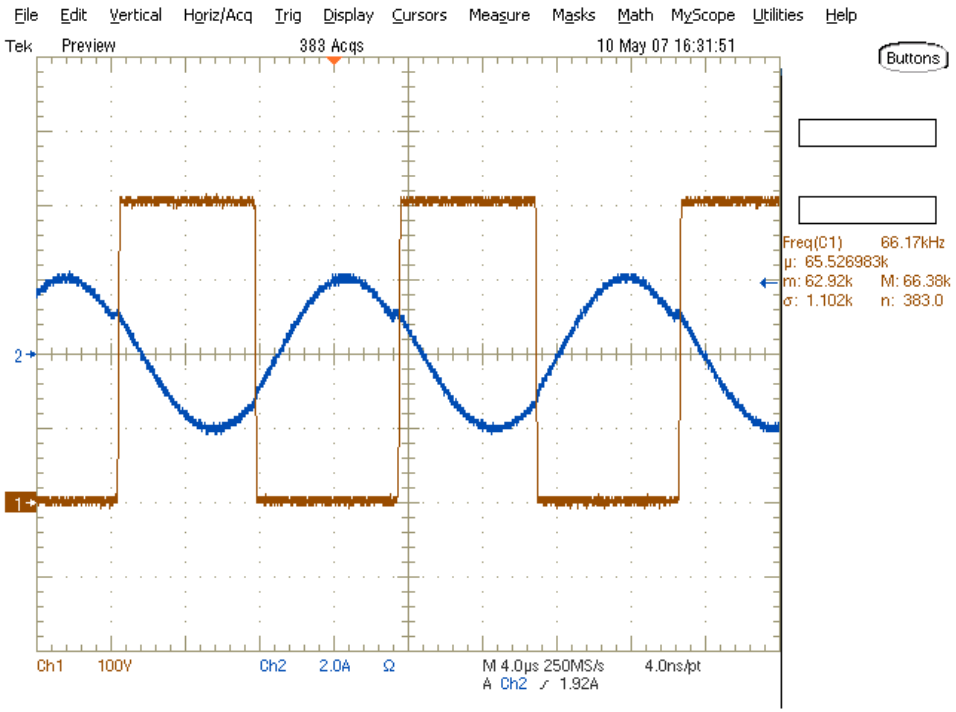

Full Load

- How to use TEA1611 design LLC

Dead time

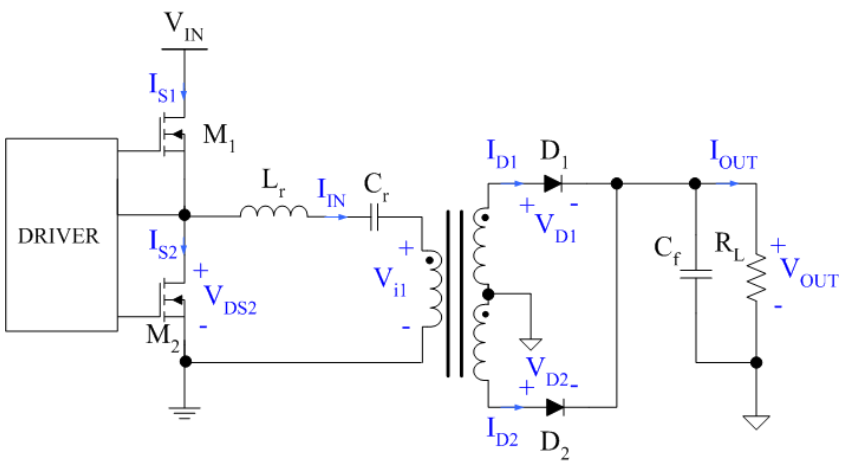

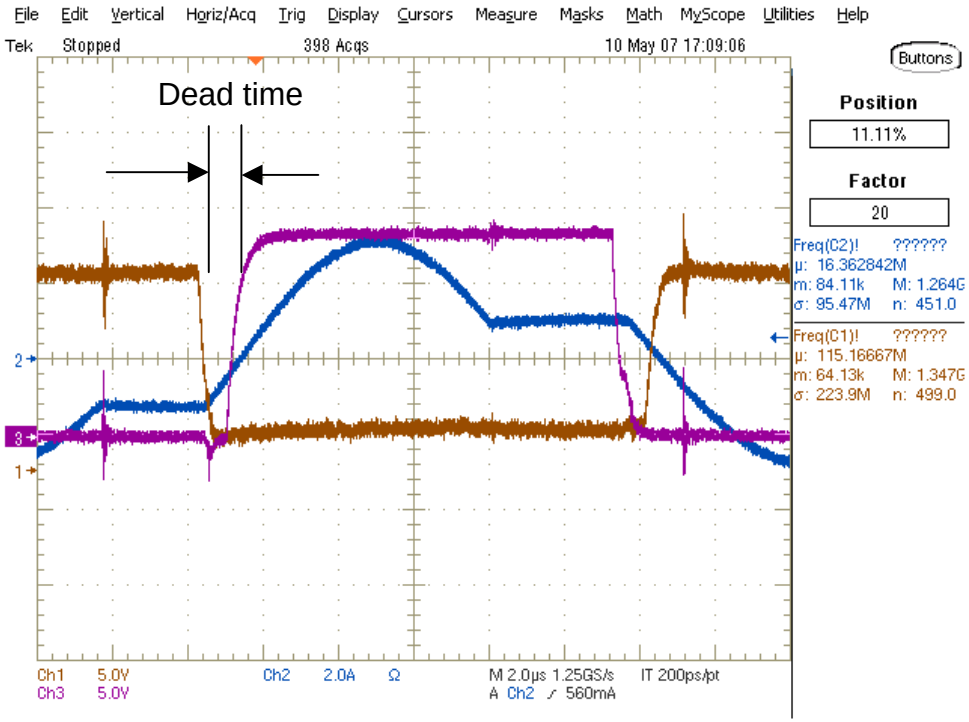

Dead time is necessary to avoid high&low side MOS turn on together.

Ch1: High side Gate.
Ch2: Resonant Current.
Ch3: Low Side Gate.

TEA1611 Zero-Voltage-Switching Resonant Converter Controller

Features

- High-accuracy oscillator handle 50% duty cycle, variable frequency control of resonant half-bridge.
- Up to 500kHz operating frequency.
- Integrated high voltage level-shift function and high voltage bootstrap diode.
- Transconductance error amplifier for ultra high-ohmic regulation feedback.
- Latched shut-down input for variety protection (OVP, OTP … etc).
- Fast latch reset input.
- Adjustable minimum and maximum frequencies.
- Adjustable dead time.
- Internal over temperature protection.
- Overcurrent protection that activates a shutdown timer.
- Wide (max 20V) supply voltage range.
- Vcc start-up 13.4V(typical), Vcc UVLO 9.4V(typical).
- Adjustable Soft Start timing pin.
- SO-20 packages

Block Diagram

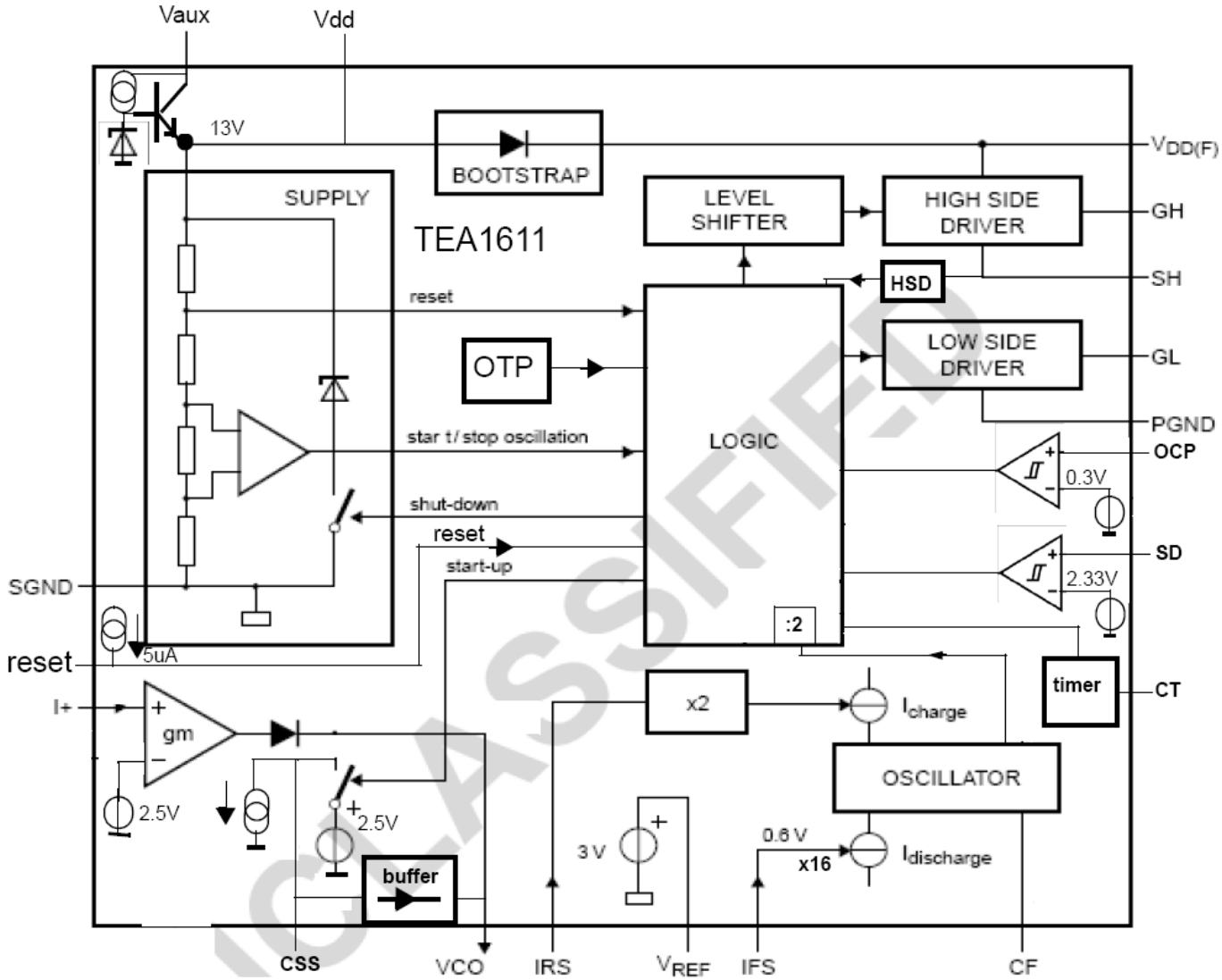

IC CLASSIFIED

IC-based Resonant Control

Application information of the TEA1611

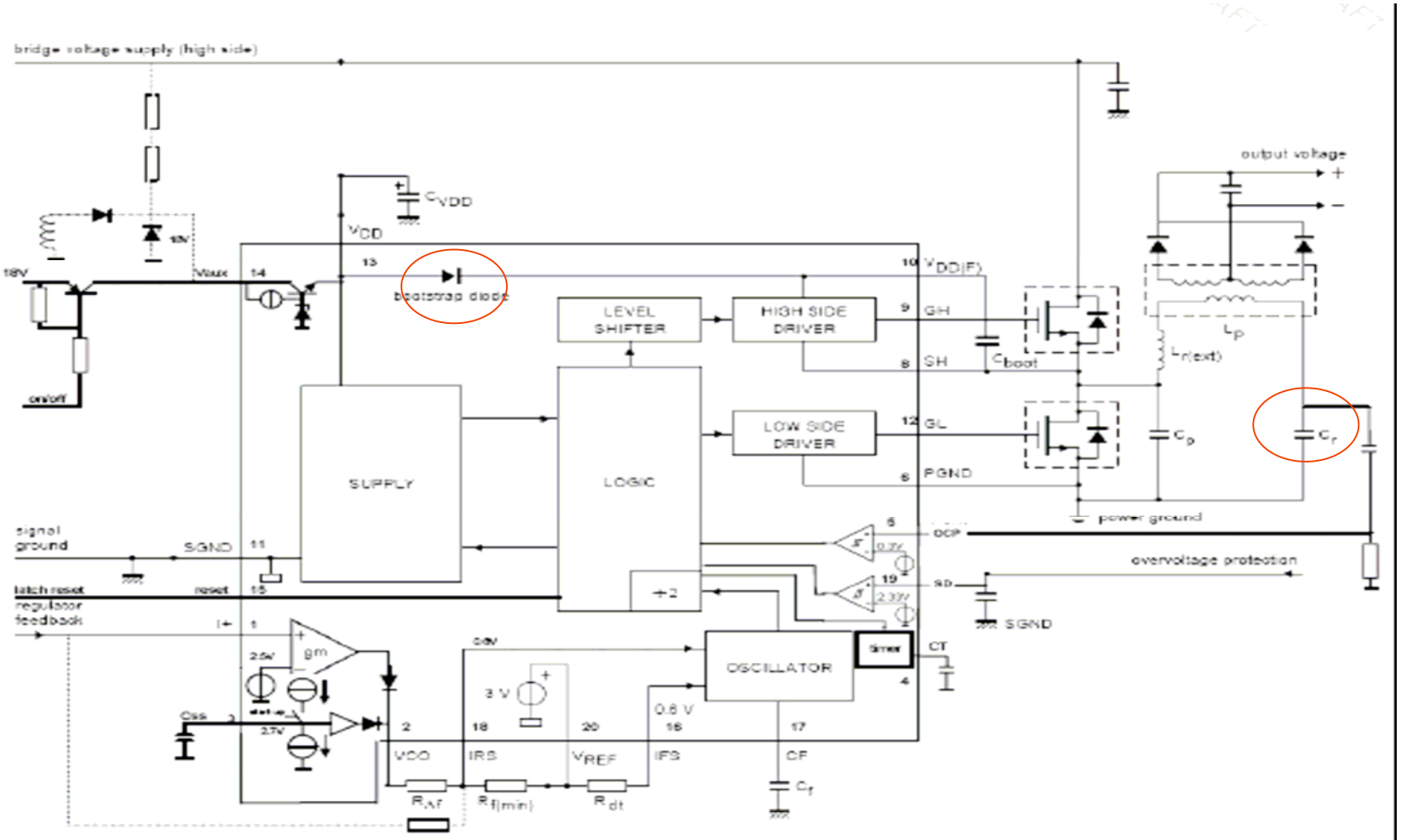

Fig 7. Test / application diagram.

IC-based Resonant Control *Start-up*

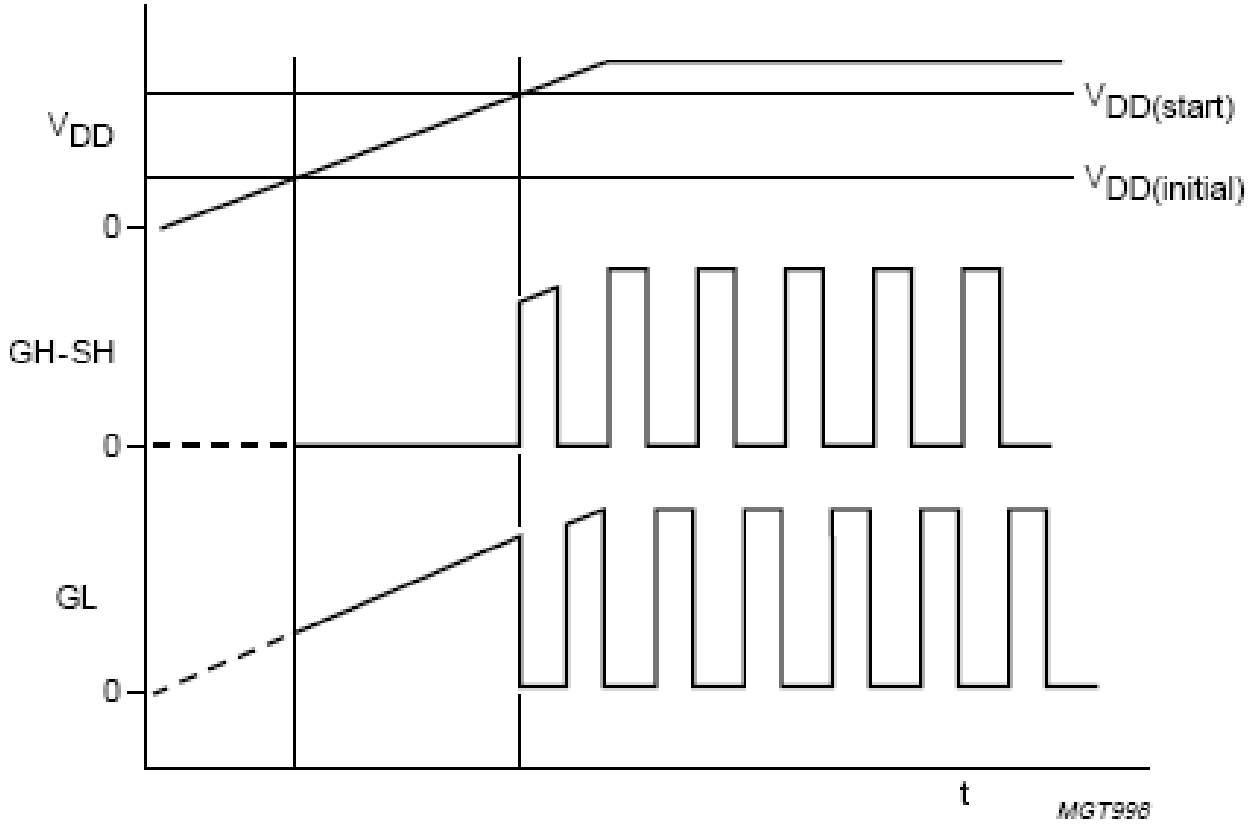

IC-based Resonant Control *Oscillator*

- The sawtooth waveform is generated by the current-controlled oscillator
- The sawtooth waveform frequency is determined by C_f and the currents through the IFS and IRS pins
- C_f, $R_{f(min)}$ and R_{dt} set the minimum frequency
- $R_{\Delta f}$ sets the maximum frequency

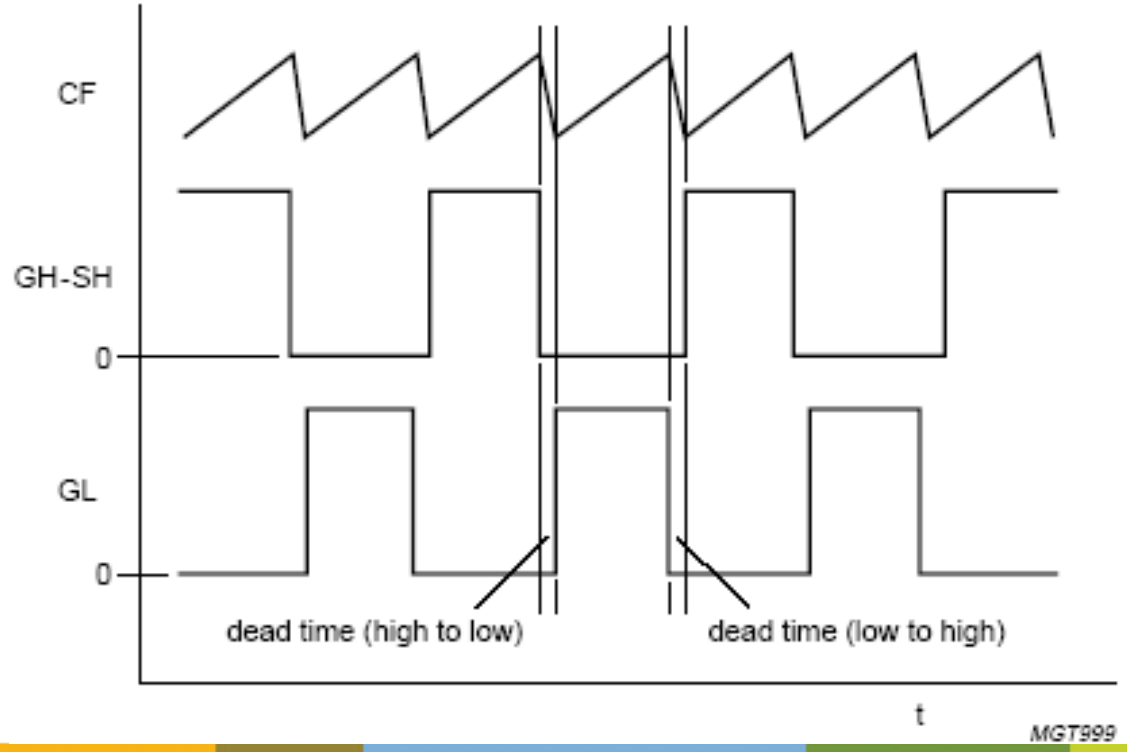

Dead time resistor R_{dt}

- The falling slope of the oscillator is determined by the IFS current I_{IFS}
- The discharge current of C_F, $I_{DISCHARGE}$, is equal to I_{IFS}
- The dead time t_{dt} between the two HB switches is:

$$I_{IFS} = \frac{2.4V}{R_{dt}}$$

$$t_{dt} = \frac{C_f \times \Delta V_{Cf}}{16 \times I_{IFS}}$$

$$t_{IFS} = t_{dt}$$

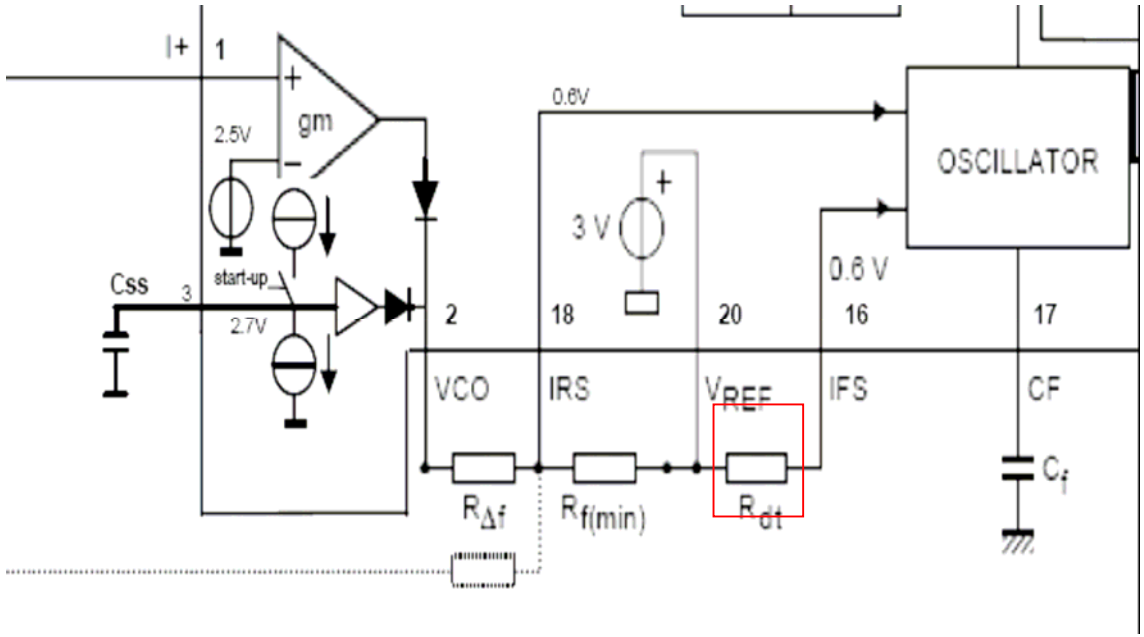

Minimum frequency resistor

- I_{CHARGE} is equal to $2I_{IRS}$
- $R_{f(min)}$ determines the minimum charge current of C_F, I_{CHARGE}, and, in turn, the rising slope of
  the voltage across C_F (assuming the control current null)
- The minimum frequency is determined by I_{CHARGE} and $I_{DISCHARGE}$ according to:

$$I_{IRS1} = \frac{2.4V}{R_{f(min)}}$$

$$t_{IRS1} = \frac{C_f \times \Delta V_{Cf}}{2 \times I_{IRS1}}$$

$$f_{osc(min)} = \frac{1}{t_{dt} + t_{IRS1}}$$

$$f_{bridge(min)} = \frac{f_{osc(min)}}{2}$$

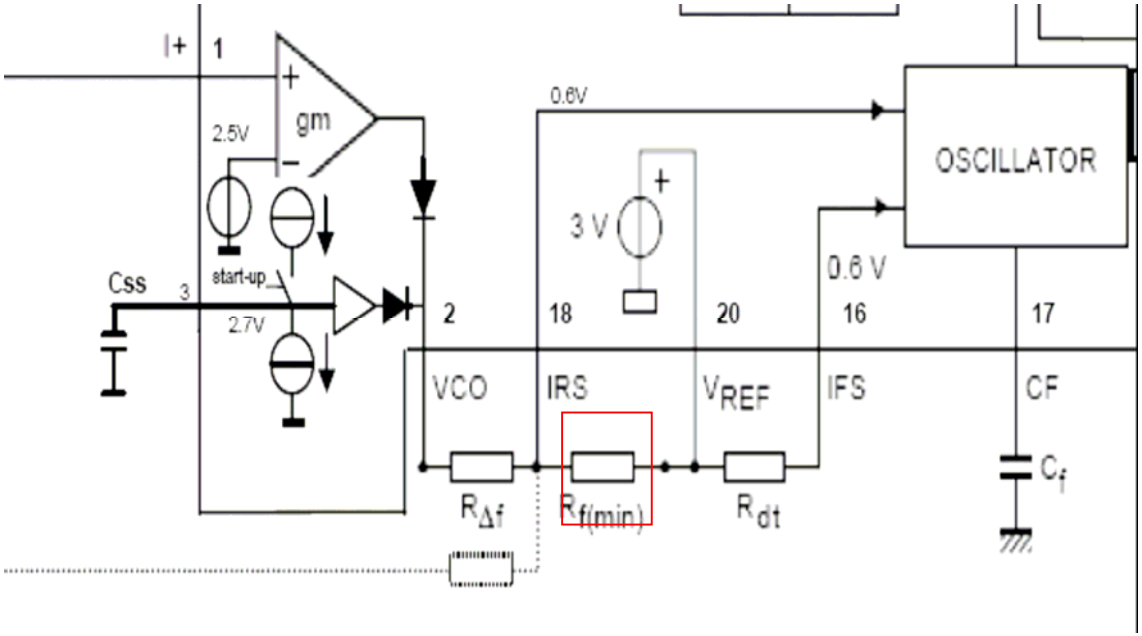

Maximum frequency resistor

- $R_{\Delta f}$ determines the maximum frequency
- The charge current of the oscillator and, in turn, the oscillation frequency increase due to the contribute of $R_{\Delta f}$

The contribute to I_{IRS} is the control current and is given by:

$$I_{IRS2(max)} = \frac{V_{VCO(max)} - 0.6}{R_{\Delta f}}$$

$$t_{IRS(min)} = \frac{C_f \times \Delta V_{Cf}}{2 \times (I_{IRS2} + I_{IRS2(max)})}$$

$$f_{osc(max)} = \frac{1}{T_{OSC}}$$

$$f_{bridge(max)} = \frac{f_{osc(max)}}{2}$$

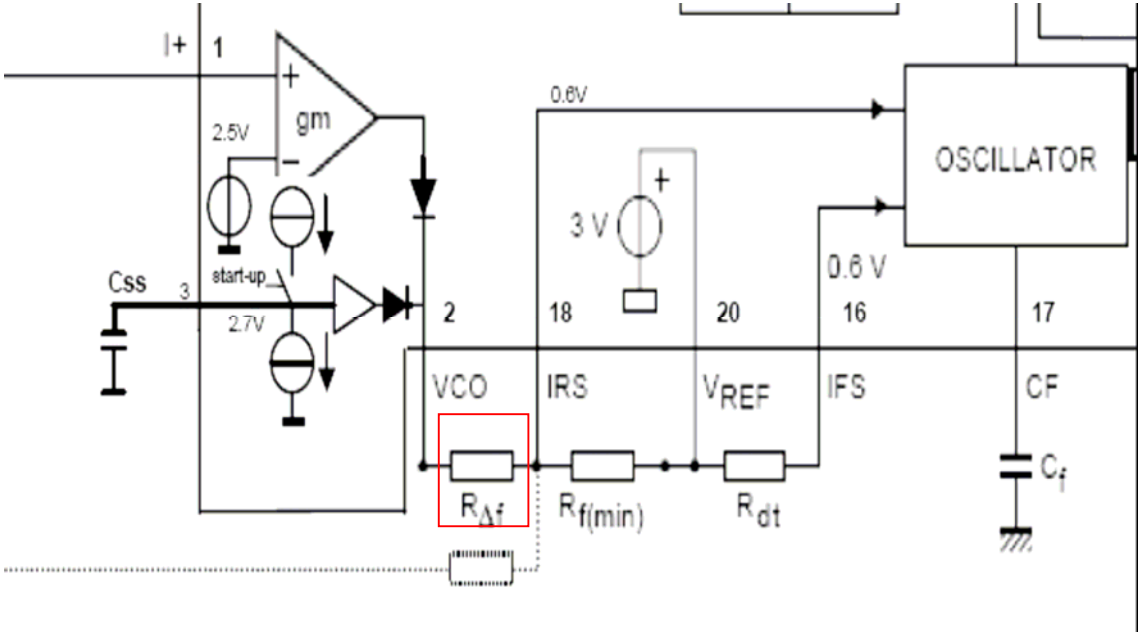

Soft start

Via a buffer the CSS pin voltage is copied to the VCO pin.
At startup the softstart capacitor is charge to 2.5V. After startup the capacitor is discharged by $I_{softstart}$ .The VCO pin voltage will follow the CSS voltage.(discharging takes place via $R_{\triangle f}$) and the frequency sweeps down, The CSS capacitor will determine the frequency sweep rate)

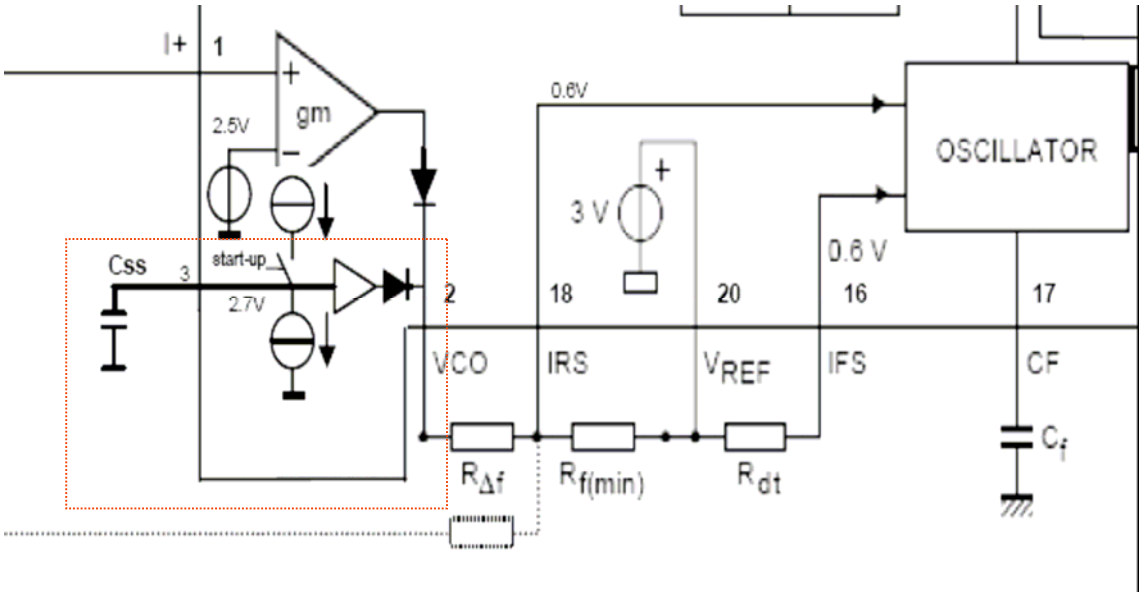

TEA1611 soft start function improved start up current

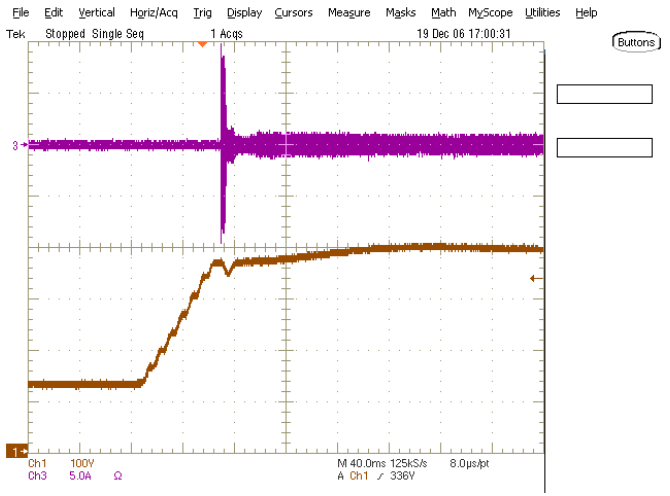

Start up@
No load

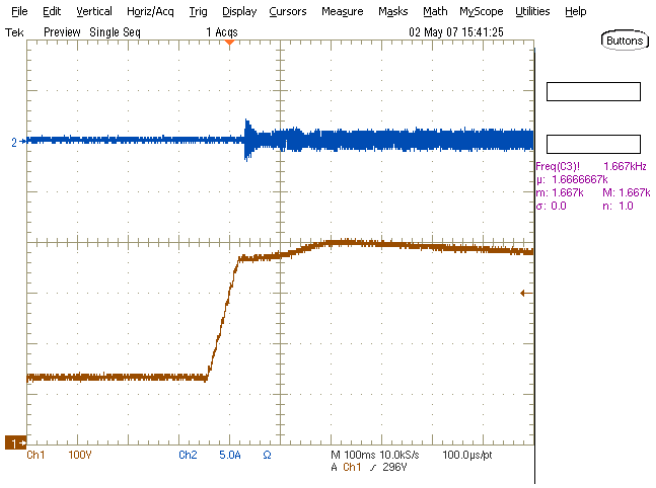

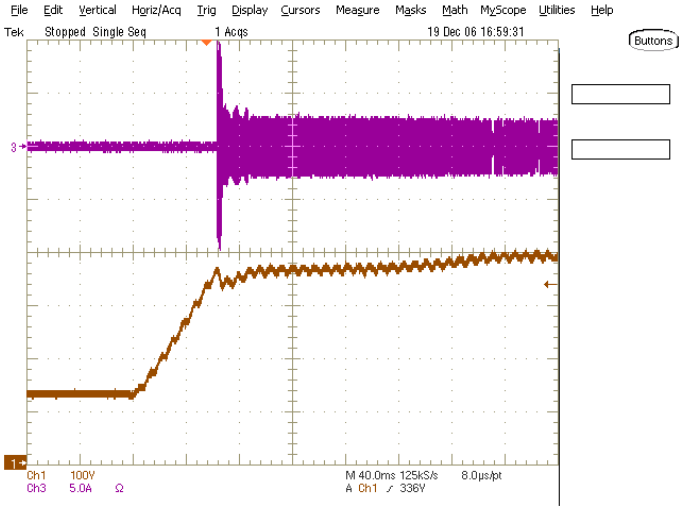

Start up@
Full load

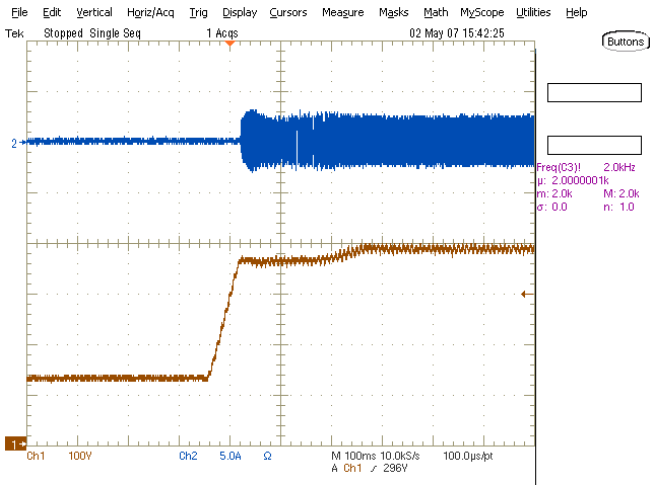

Shut-down protection

- When V_{SD} reaches the threshold level $V_{SD(th)}$ (2.33V) both the HB switches turn off and the TEA1611 enters shut-down mode

- During the shut-down mode the TEA1611 can be activated only by lowering V_{DD} under $V_{DD(reset)}$ (5.3 V) to reset the shut-down latch

- The converter re-gains the oscillation operating mode once V_{DD} overcomes the value $V_{DD(start)}$.

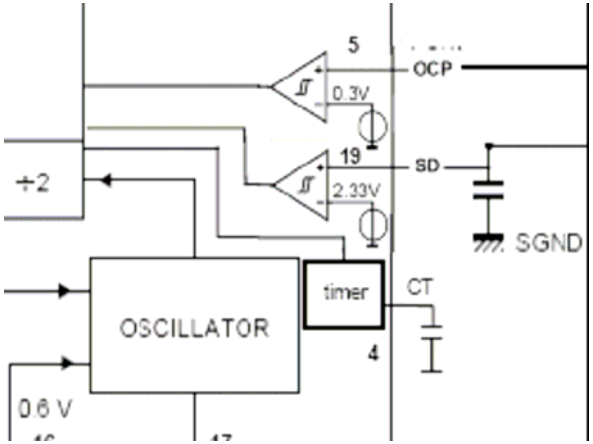

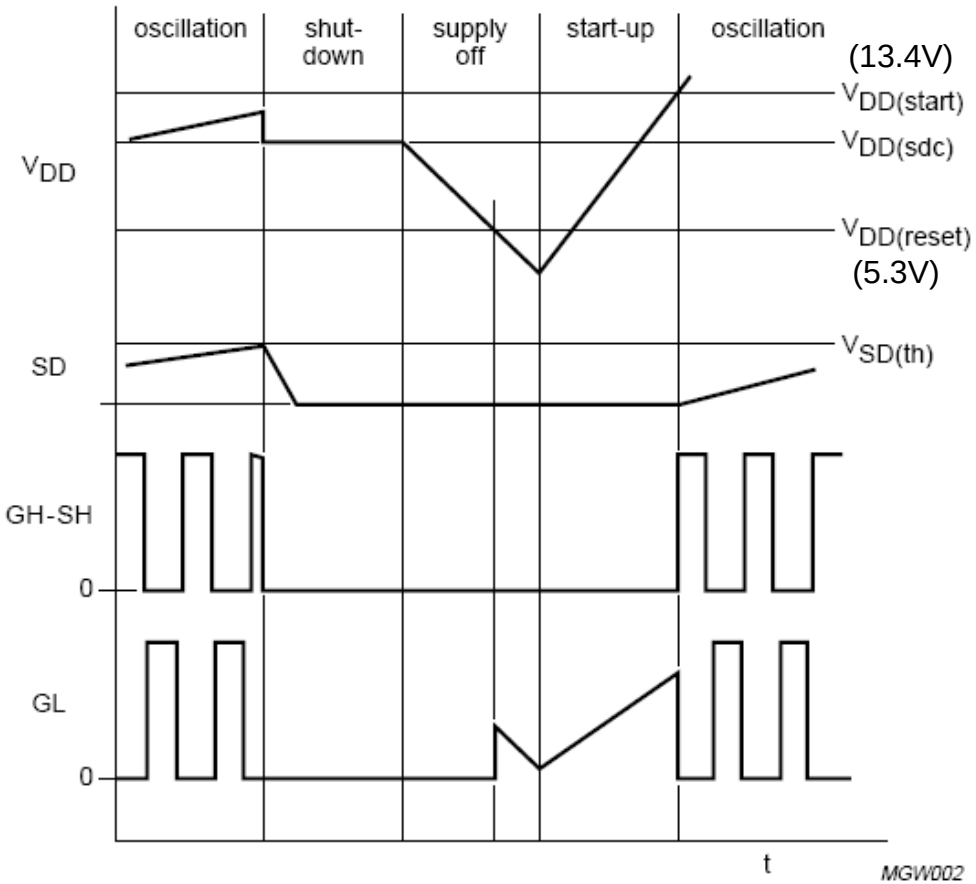

Over-Current Protection and timer

The OCP input continuously compares the OCP pin voltage with OCPref. When the OCP pin voltage is higher than OCPref (305mV), the timer capacitor CT will be charged with CTcharge during the next full CF cycle.

In case the CT voltage exceeds CTVmax (3V), the TEA1611 will switch over to shutdown mode. The timer capacitor will be discharged with CTdischarge until the CT voltage reaches CTVmin (0.7V) afterward which a soft start cycle is started.

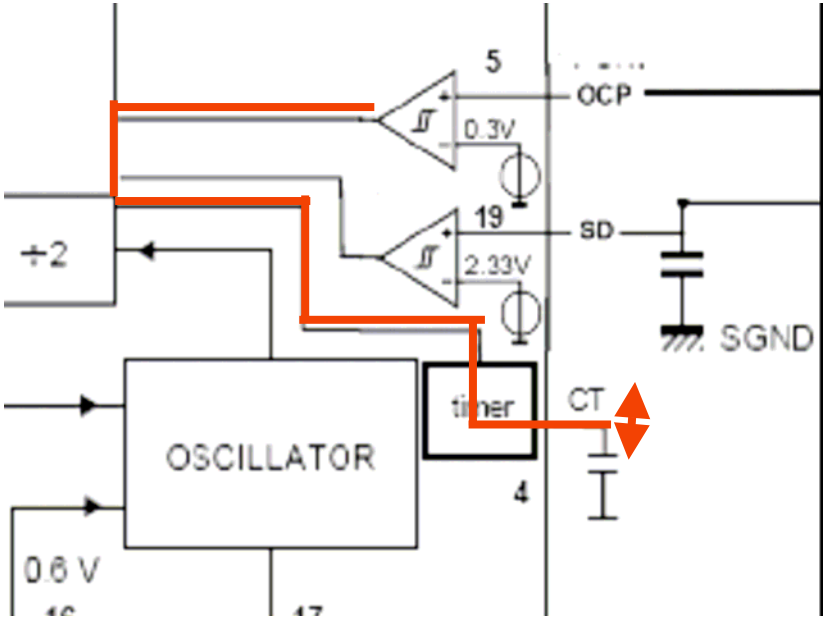

CT pin

CT_{charge}	charge current	27	µA
$CT_{discharge}$	discharge current	10	µA
CT_{Vmax}	upper triplevel	3	V
CT_{Vmin}	lower triplevel	0.7	V

Typical application circuit

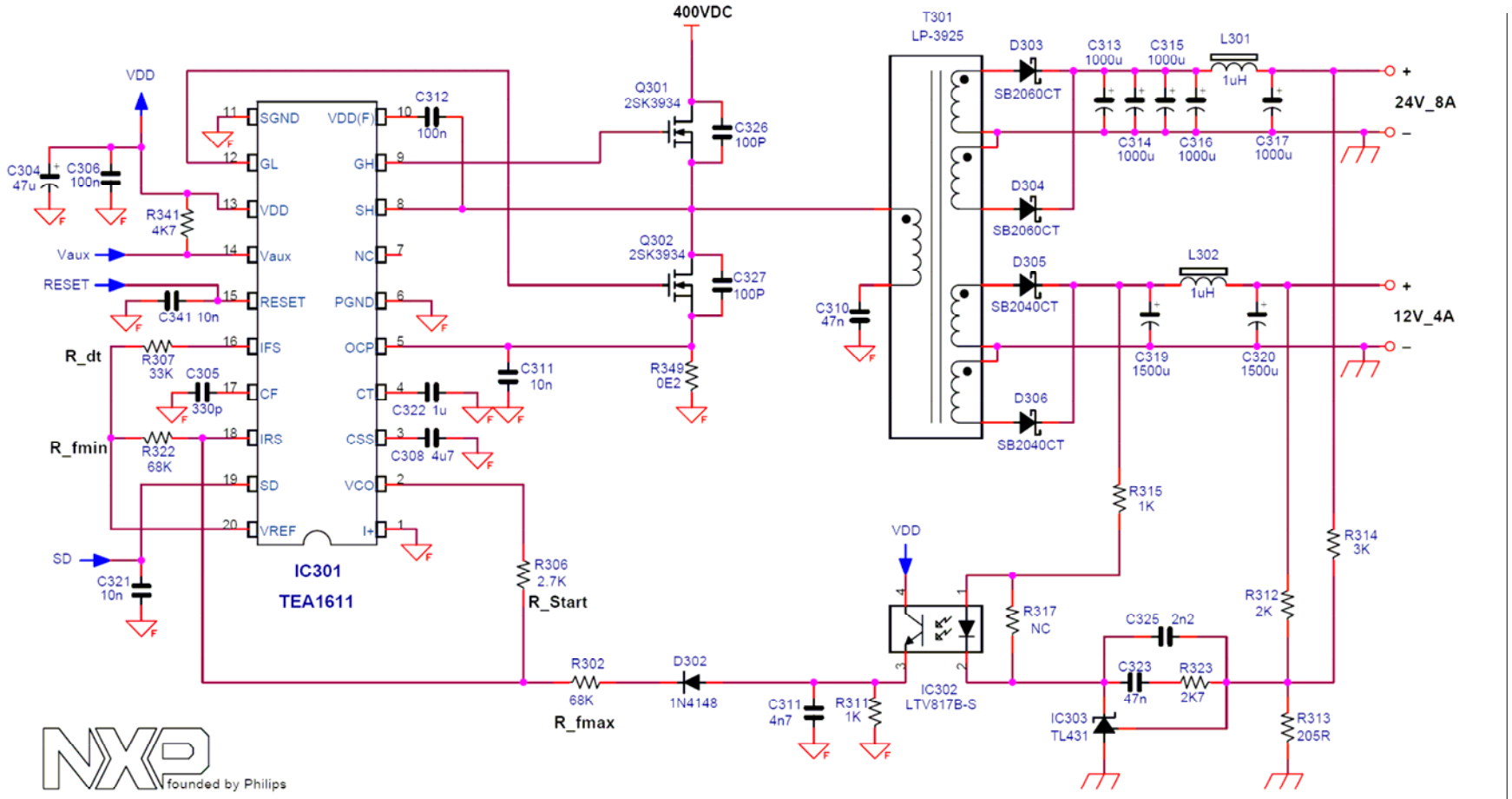

Fast Latch Reset application circuit

The internal shutdown latch can be reset via the reset input, This input is active low.

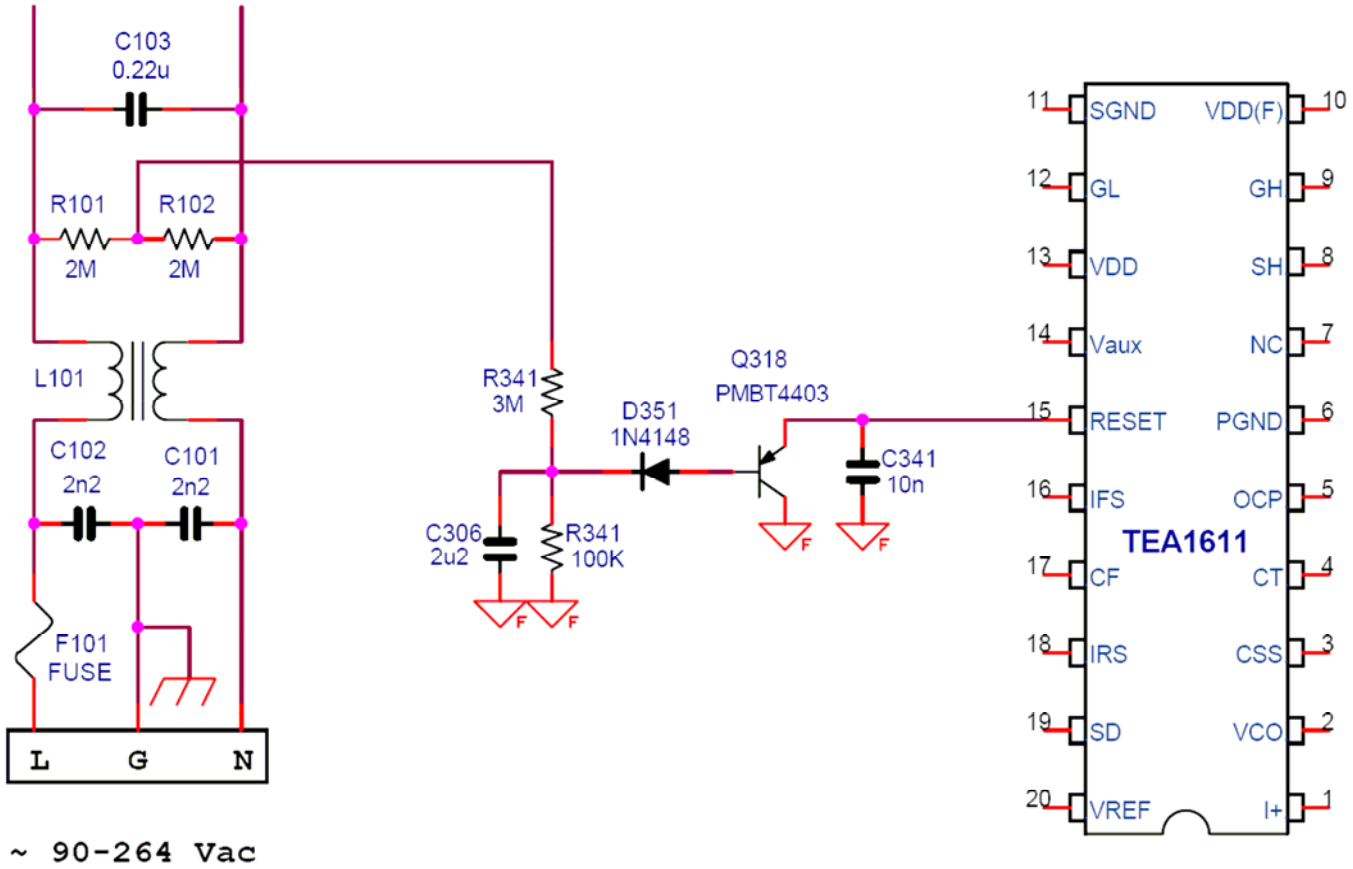

Comparison of controllers for resonant applications

Manufacturer Type number	NXP TEA1610	NXP TEA1611	NXP TEA1612
Package	SO/DIP 16	SO 20	SO 24
High Voltage start-up	External Resistor	External Resistor	External Resistor
PFC			Control output
Integrated 600V Level shifter	V	V	V
Powerfet driver capability (sink/source)	300/180mA	530/300mA	530/300mA
Bootstrapping	internal	internal	internal
Maximum Half Bridge frequency	500kHz	500kHz	500kHz
Burst operation (low power mode)			V
Dead-time	adjustable	adjustable	adjustable

Comparison of controllers for resonant applications

Manufacturer Type number	NXP TEA1610	NXP TEA1611	NXP TEA1612
Vcc supply max limit	15V	20V	20V
Reference voltage [1]	3V	3V	3V
Error amplifier	V	V	V
On/off enable function half-bridge		V	V
General protection input	V	V	V
Input under voltage protection (Brown out protection)			V
Over current protection		V	V
Fast latch reset via pin		V	V

Note [1]: Can be used for supplying external circuitry

Extra functions of TEA1612

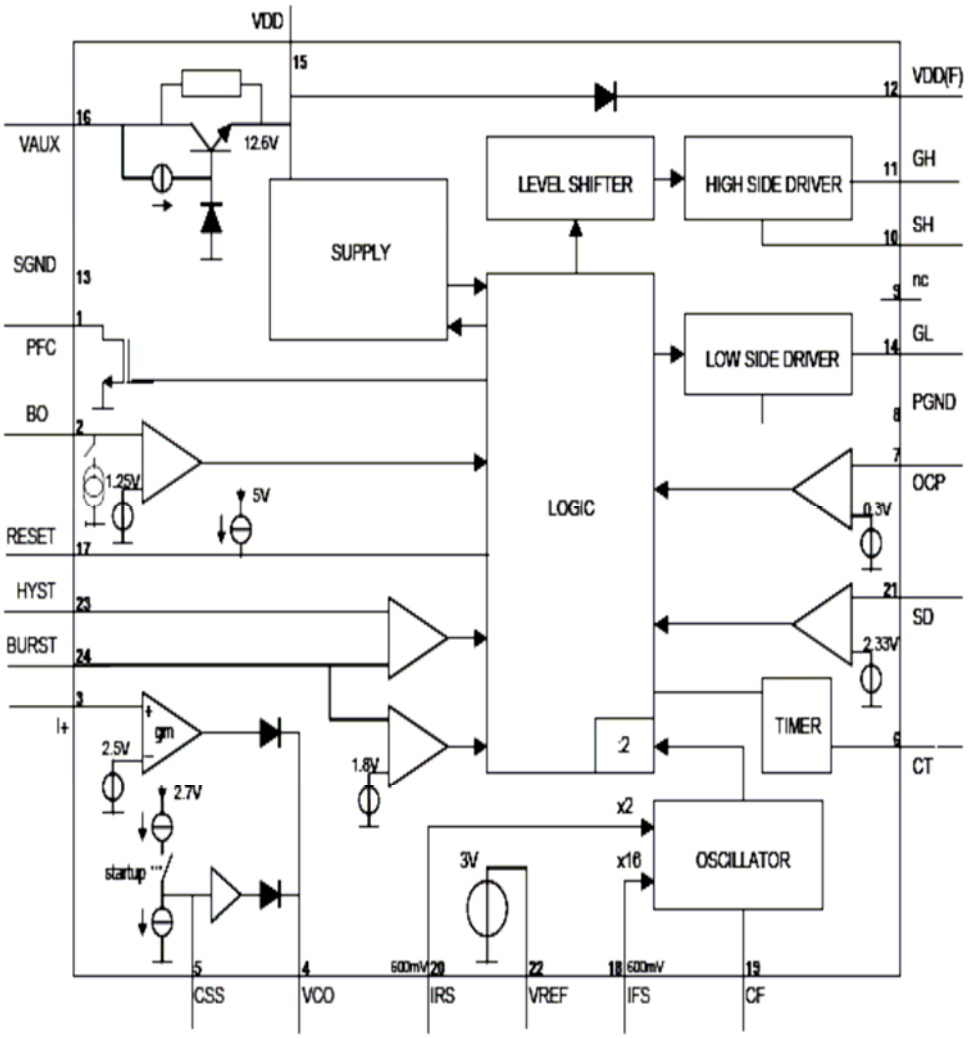

Table 2. Pin description, proposal

Symbol	Pin	Description
PFC	1	PFC-control output
BO	2	brown-out input
I+	3	error amplifier non-inverting input
VCO	4	error amplifier output
CSS	5	softstart capacitor input
CT	6	timer capacitor input
OCP	7	over current protection input
PGND	8	power ground
n.c.	9	high voltage spacer
SH	10	high side switch source connection
GH	11	high side switch gate connection
VDD(F)	12	floating supply high side driver
SGND	13	signal ground
GL	14	low side switch gate connection
VDD	15	supply voltage
Vaux	16	auxillary supply voltage
reset	17	latch reset input
IFS	18	oscillator discharge current input
CF	19	oscillator capacitor
IRS	20	oscillator charge input current
SD	21	shutdown input
Vref	22	reference voltage
Hyst	23	hysteresis reference input for burstmode
Burst	24	burst comperator input

Thank you